# GRACE 327-720
# (CSR-GR-03-02)

## Gravity Recovery and Climate Experiment

# Product Specification Document

(Rev 4.3 – April 25, 2006)

Srinivas Bettadpur
Center for Space Research
The University of Texas at Austin

Prepared by:

_____
Srinivas V. Bettadpur, UTCSR
GRACE Science Operations Manager

Contact Information:
Center for Space Research
The University of Texas at Austin
3925 W. Braker Lane, Suite 200
Austin, Texas 78759-5321, USA
Email: grace@csr.utexas.edu

Reviewed by:

Frank Flechtner, GRACE Dep. Project Manager
GeoForschungsZentrum Potsdam

Gerhard Kruizinga, GRACE Level-1 Cognizant
Jet Propulsion Laboratory, California

Approved by:

_____
Byron D. Tapley, UTCSR
GRACE Principal Investigator

_____
Christoph Reigber, GFZ
GRACE Co-Principal Investigator

# DOCUMENT CHANGE RECORD

| Issue | Date | Pages | Change Description |
|---|---|---|---|
| Draft | Nov 4, 1999 | All | Initial Version |
| Issue 1.0 | Nov 23, 2000 | All | - Ch I: Updated frame definitions & rotations<br>- Ch II: Listed references from Level-0 data to TM application packets<br>- All Chapters: Updated data rates, definitions & formats |
| Issue 2.0 | Oct 29, 2001 | All | - Ch I : Updated frame definitions. Added satellite nomenclature & thruster information<br>- Ch II : Moved AppPkt definition to Appendix I<br>- Ch III-V : Updated product nomenclature. |
| Issue 3.0 | Feb 18, 2002 | All | I.4: Updated Product Summary<br>I.5.1.1-2: Updated time system reckoning<br>I.5.2.3: Updated SCA head orientations<br>I.5.4: Added Satellite Macro Model<br>Ch II-V: Updated product nomenclature, data rates & formats specifications<br>Ch IV: All Level-1B flight data latencies changed to ≈ 12 days |
| Issue 4.0 | Dec 1, 2003 | All | Header – introduced creating center (UTCSR) document number into header<br>I.4: Altered Level-1B alignment products to start with prefix Q and vectors to start with V. Altered Level-2 products nomenclature consistent with Chapter V.<br>I.5.2: Introduced Science Reference Frame (SRF)<br>- also introduced K-Frame<br>- Clarified the frame of specification of Level-1B products as the SRF<br>I.5.3.6: Updated SLR antenna location<br>I.5.3.8: Deleted section on definition of spherical harmonics<br>I.5.4: Inserted section of "related documents"<br>Ch III: Updated data rates & file contents<br>Ch. IV: Replaced references to "Accelerometer Frame" by "Science Reference Frame" – where appropriate.<br>IV.5: Corrected definitions to alignment products.<br>Ch V: Replaced entire chapter to bring it to consistency with the *Level-2 Product User Handbook*. |

| | | | |
|---|---|---|---|
| Issue 4.1 | Jan 9, 2004 | | I.3 & Ch III-V: Updated (ascii-gzipped) data volume entries for all products.<br>I.5.1.1 – Changed GPS-KBR synchronization from 70 to 50 ps.<br>I.5.3.6 – Noted that specified values include the correction to LRR. |
| Issue 4.2 | Aug 2, 2004 | 23<br>56, 58, 59 | Added note on L1/L2 phase centers<br>IV.5.5, 7, 8 – Added mention of L1 & L2 phase centers |
| Issue 4.3 | Apr 25, 2006 | 63-64 | Made V.2 compatible with L-2 User Handbook (GRACE 327-734) |
| | | | |
| | | | |
| | | | |
| | | | |
| | | | |
| | | | |
| | | | |
| | | | |
| | | | |
| | | | |
| | | | |

# TABLE OF CONTENTS

**DOCUMENT CHANGE RECORD** ..... **2**

**TABLE OF CONTENTS** ..... **4**

**I INTRODUCTION** ..... **7**

I. 1 SCOPE OF DOCUMENT ..... 7
I. 2 GRACE SCIENCE DATA SYSTEM ..... 7
*I.2.1 SDS Overview* ..... *7*
*I.2.2 Level-0 Data Products* ..... *10*
*I.2.3 Level-1A Data Products* ..... *10*
*I.2.4 Level-1B Data Products* ..... *10*
*I.2.5 Level-2 Data Products* ..... *10*
I. 3 PRODUCT NOTATION ..... 11
I. 4 DATA PRODUCT SUMMARY ..... 12
I. 5 DEFINITIONS ..... 14
*I.5.1 Time Systems* ..... *14*
I.5.1.1 Receiver Clock Time ..... 14
I.5.1.2 GPS Time ..... 14
I.5.1.3 Coordinated Universal Time (UTC) ..... 14
I.5.1.4 Additional Note on OBDH Time ..... 14
*I.5.2 Coordinate Systems* ..... *15*
I.5.2.1 Science Reference Frame (SRF) ..... 15
I.5.2.2 K-Frame (KF) ..... 15
I.5.2.3 Satellite Frame (SF) ..... 15
I.5.2.4 Accelerometer Frame (AF) ..... 16
I.5.2.5 Star Camera Frame (SCF) ..... 16
I.5.2.6 Inertial Frame ..... 16
I.5.2.7 Terrestrial Frame ..... 17
I.5.2.8 WGS84 Coordinates ..... 17
I.5.2.9 Important Usage Note ..... 17
*I.5.3 Satellite Description* ..... *18*
I.5.3.1 Satellite Nomenclature ..... 18
I.5.3.2 Thruster Accommodation ..... 18
I.5.3.3 GRACE Macro Model: Mass ..... 19
I.5.3.4 GRACE Macro Model: Exterior Dimensions ..... 20
I.5.3.5 GRACE Macro Model: Surface Properties ..... 22
I.5.3.6 GRACE Macro Model: Antenna Locations ..... 23
I.5.3.7 Usage Note on Satellite Sensor Locations ..... 23
*I.5.4 Related Documents* ..... *23*

**II LEVEL-0 DATA PRODUCTS** ..... **24**

II. 1 INTRODUCTION ..... 24
II. 2 SCIENCE DATA ..... 24
II. 3 HOUSEKEEPING DATA ..... 24

**III LEVEL-1A DATA PRODUCTS** ..... **25**

III. 1 INTRODUCTION ..... 25
III. 2 IPU DATA ..... 25
*III.2.1 GPS Flight Receiver Data* ..... *25*
*III.2.2 GPS On-Board Orbit Ephemerides* ..... *26*
*III.2.3 Smoothed On-Board Clock Solution* ..... *27*

*III.2.4 K-Band Ranging Data* ..... *28*
*III.2.5 Star Camera Data* ..... *29*
*III.2.6 IPU Housekeeping Data* ..... *30*
III. 3 ICU DATA ..... 31
*III.3.1 Acceleration Science Data* ..... *31*
*III.3.2 Accelerometer Housekeeping Data* ..... *32*
III. 4 SPACECRAFT HOUSEKEEPING DATA ..... 33
*III.4.1 OBDH to GPS Time Mapping* ..... *33*
*III.4.2 Magnetometer & Magnetorquer Data* ..... *34*
*III.4.3 Thruster Activation Data* ..... *35*
*III.4.4 Tank Sensor Information* ..... *36*
*III.4.5 Satellite Mass Information* ..... *37*

**IV LEVEL-1B DATA PRODUCTS ..... 38**

IV. 1 INTRODUCTION ..... 38
IV. 2 IPU DATA ..... 38
*IV.2.1 GPS Flight Receiver Data* ..... *38*
*IV.2.2 Precise GRACE Satellite Orbit Ephemerides* ..... *39*
*IV.2.3 Precise Clock Solution* ..... *40*
*IV.2.4 USO Frequency Estimate* ..... *41*
*IV.2.5 Dual-One-Way Ranging Data* ..... *42*
*IV.2.6 Star Camera Data* ..... *43*
*IV.2.7 IPU Housekeeping Data* ..... *44*
IV. 3 ICU DATA ..... 45
*IV.3.1 Acceleration Data* ..... *45*
*IV.3.2 Accelerometer Housekeeping Data* ..... *46*
IV. 4 SPACECRAFT HOUSEKEEPING DATA ..... 47
*IV.4.1 Magnetometer & Magnetorquer Data* ..... *47*
*IV.4.2 Thruster Activation Data* ..... *48*
*IV.4.3 Tank Sensor Information* ..... *49*
*IV.4.4 Satellite Mass Information* ..... *50*
*IV.4.5 OBDH to GPS Time Mapping* ..... *51*
IV. 5 ANCILLARY GRACE DATA ..... 52
*IV.5.1 Star Camera Heads Orientation wrt SRF* ..... *52*
*IV.5.2 Satellite Frame Orientation wrt SRF* ..... *53*
*IV.5.3 Star Camera Heads Orientation wrt K-Frame* ..... *54*
*IV.5.4 Center of Mass Offset Estimate* ..... *55*
*IV.5.5 GPS Navigation Antenna Offset* ..... *56*
*IV.5.6 K-Band Antenna Offset Estimate* ..... *57*
*IV.5.7 GPS Occultation Antenna Offset* ..... *58*
*IV.5.8 GPS Back-Up Antenna Offset* ..... *59*
*IV.5.9 SLR Corner Cube Offset* ..... *60*
*IV.5.10 Input Time-Variable Atmospheric Gravity Model* ..... *61*
*IV.5.11 Ocean Bottom Pressure Load Model* ..... *62*

**V LEVEL-2 DATA PRODUCTS ..... 63**

V. 1 INTRODUCTION ..... 63
V. 2 PRODUCT INDENTIFIER ..... 63
V. 3 PRODUCT ATTRIBUTES ..... 65

**VI APPENDIX ..... 66**

VI. 1 BACKGROUND ..... 66
VI. 2 ACCELEROMETER DATA ..... 67
VI. 3 IPU DATA ..... 68
*VI.3.1 KBR, GPS-OD & GPS-OCC Phase Data* ..... *68*

*VI.3.2 Star Camera Assembly Data* ..... *69*
*VI.3.3 IPU Navigation Solution* ..... *70*
*VI.3.4 IPU Housekeeping Data* ..... *71*
VI. 4 HOUSE-KEEPING APPLICATION PACKETS ..... 72
*VI.4.1 Time Stamp Packet* ..... *72*
*VI.4.2 AOCS Default H/K Data* ..... *73*
*VI.4.3 Cumulative Thruster On-Time Data* ..... *74*
*VI.4.4 Satellite Thermistors Data* ..... *75*
*VI.4.5 Magneto-Torquer & Magnetometer Data* ..... *76*

**LIST OF ACRONYMS** ..... **77**

# I INTRODUCTION

## I. 1 SCOPE OF DOCUMENT

This document provides a detailed description of data products at all levels for the Gravity Recovery And Climate Experiment (GRACE) Mission. The data products specified in this document are obtained from the science instruments and subsystems on board the twin GRACE spacecrafts, and include the results of any ground data processing carried out by the GRACE Science Data System (SDS).

At all levels of science data processing, several additional data are also needed. These may include the results of pre-flight tests or calibration experiments carried out by the GRACE project. Further, certain science data are collected by various terrestrial observatories specifically for the GRACE mission, and are acquired by the GRACE SDS through existing, independent data systems outside the GRACE project. Other ancillary data (independent of the on-board measurements) are generated by the GRACE SDS itself. All of these data products are specified in this document. However, standard data products (e.g. products available from the IGS or IERS), commonly available to the science community and independently documented, are not specified in this document.

This document is consistent with, and responsive to

- GRACE Science Data System Development Plan (GRACE 327-710);
- Science & Mission Requirements Document (GRACE 327-200).

Other applicable documents include

- GRACE Satellite System Specification (GRACE 327-400)
- SuperSTAR Accelerometer Specification (GRACE 327-520)
- Instrument Processing Unit Specification (GRACE 327-540)
- Star Camera Specification (GRACE 327-530)
- On-Board Software Data Interfaces & Data Flow Document (GR-DJO-SW-0005)
- Level-1 User Handbook (GRACE 327-733)
- Level-2 User Handbook (GRACE 327-734)
- Level-2 Formats Document (GRACE 327-732)

The Product Specification Document is a "living" document. With the increasing maturity of the Science Data System, as well as other GRACE project systems, the information contained here is expected to evolve further. At suitable intervals, updated versions of this document will be released.

## I. 2 GRACE SCIENCE DATA SYSTEM

### *I.2.1 SDS Overview*

The GRACE SDS is a distributed system. System development, data processing and archival is shared between the Jet Propulsion Laboratory (JPL), The University of Texas

Center for Space Research (UTCSR) and the GeoForschungsZentrum Potsdam (GFZ). The SDS is designed to perform all tasks for gravity field processing through the production of the monthly and mean gravity field models, in accordance with the GRACE SDS Development Plan (327-710), and the SMRD (327-200).

The general data flow for the GRACE mission is presented in Figure I-1, with the SDS components shaded.

In general, all science data are collected on-board continuously during the mission. The exception to this is the GPS radio occultation data, which will be gathered to provide approximate 200 to 250 profiles per day. The duration of each profile depends on the rise and set geometry of the GPS satellite relative to the GRACE satellites. The housekeeping data, on the other hand, is collected as available, depending on the operating modes of the satellite.

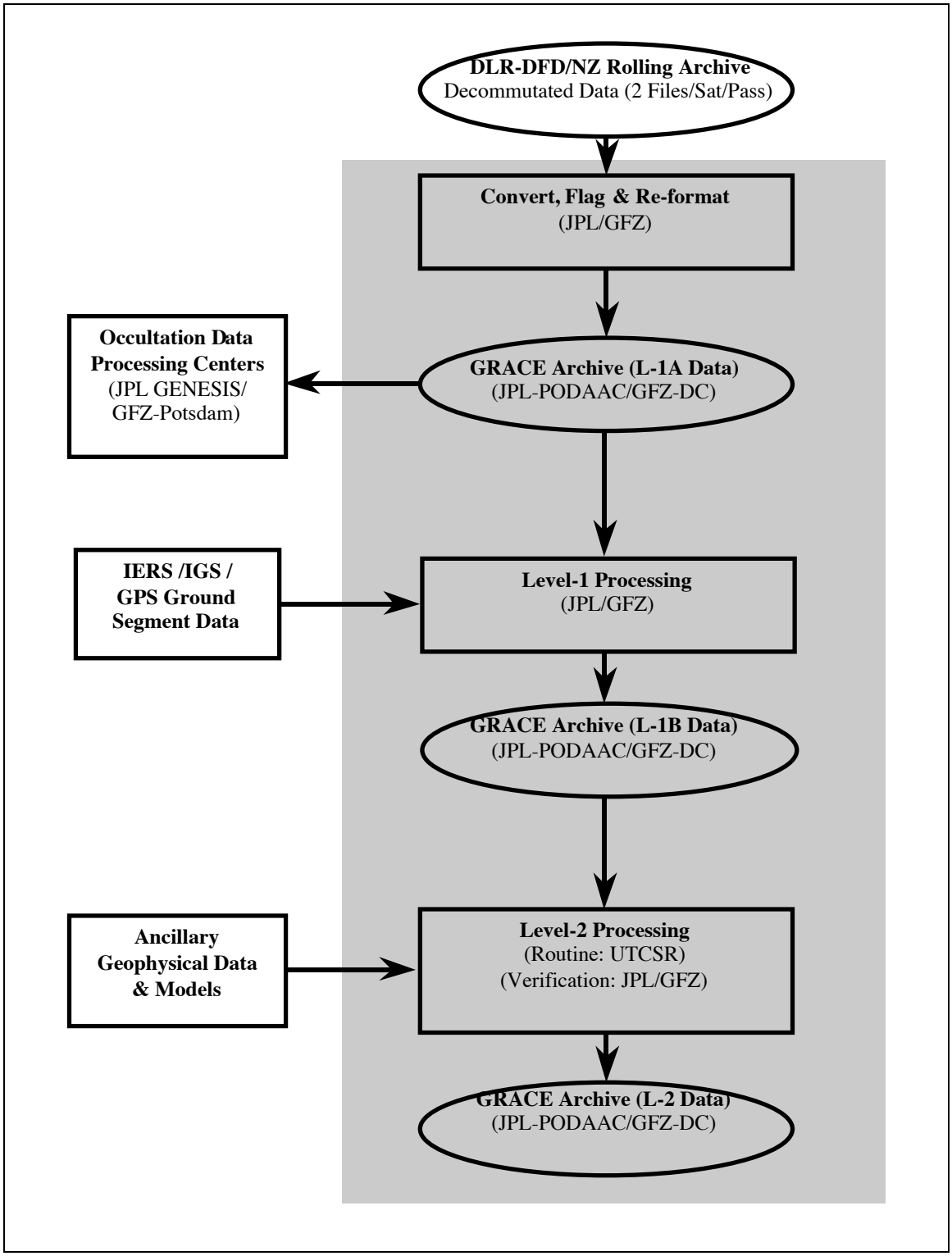


**Figure I-1 GRACE Science Data Flow (Shaded areas denote the SDS)**

### *I.2.2 Level-0 Data Products*

The Level-0 data products are the result of telemetry data reception, collection and decommutation by the GRACE Raw Data Center (RDC) at DLR in Neustrelitz. This telemetry data from each down-link pass is separated into the Science Instrument and Spacecraft Housekeeping data streams, and placed in a rolling archive at the RDC. From each satellite, as a result, two files from each pass are made available in the rolling archive. These two files are defined to be the Level-0 Data Products.

The GRACE SDS acquires these data from the rolling archive at RDC, and stores them in permanent archives at the SDS centers at JPL and GFZ. Each Level-0 data product file contains, besides the appropriate headers, the un-scaled, binary encoded instrument communication packets. These individual data packets are described in detail in the respective instrument and spacecraft specification documents, but a few of them are also included here for completeness. The description of the instrument data packets in this document is secondary, and does not supersede their descriptions in the applicable instrument specification documents.

### *I.2.3 Level-1A Data Products*

The Level-1A Data Products are the result of a non-destructive processing applied to the Level-0 data. The sensor calibration factors are applied in order to convert the binary encoded measurements to engineering units. Where necessary, time tag integer second ambiguity is resolved and data are time tagged to the respective satellite receiver clock time. Editing and quality control flags are added, and the data is reformatted for further processing. The Level-1A data are reversible to Level-0, except for the bad data packets. This level also includes the ancillary data products needed for processing to the next data level.

### *I.2.4 Level-1B Data Products*

The Level-1B Data Products are the result of a possibly destructive, or irreversible, processing applied to both the Level-1A and Level-0 data. The data are correctly time-tagged, and data sample rate is reduced from the higher rates of the previous levels. Collectively, the processing from Level-0 to Level-1B is called the Level-1 Processing. This level also includes the ancillary data products generated during this processing, and the additional data needed for further processing.

### *I.2.5 Level-2 Data Products*

The Level-2 data products include the gravity field and related data products derived from the application of Level-2 processing to the previous level data products. This level also includes the ancillary data products generated during this processing.

## I. 3 PRODUCT NOTATION

Each data product is labeled with a product identifier. For each product, certain characteristic attributes are described in later chapters. This section defines the product identifier and the product attributes. The product identifier, in conjunction with either a date or a range of dates in a specified format determines the filename containing the data product.

| | |
|---|---|
| **Product Identifier & associated filename** | **XXXLL_(DATE)_S_RL** Where,<br>**XXX**: is a product mnemonic<br>**LL**: specifies the data product level (00, 1A, 1B or -2).<br>**S**: If satellite specific, it is one of A or B; X otherwise.<br>**RL**: Specifies the Release number (00, 01, 02, … )<br><br>The **(DATE)** field (without parentheses) determines the unique filename which contains the data for that date. This field is specified in the format *YYYY-MM-DD*.<br><br>Exceptions to this nomenclature are noted in relevant sections. |
| **Product Definition** | A verbal, precise and unambiguous description of the information content of the data product. |
| **Representation** | Description of how the data is represented, if it is not directly measured, or is defined relative to either other constants or other data. |
| **Units** | Units of the data product |
| **System** | If applicable, the reference system |
| **Resolution** | The temporal or spatial resolution of the product. If applicable, also specifies the span in time or space for which the product is defined. |
| **Inputs** | Products from which this data product was derived (immediately previous set) |
| **Data Volume** | Quantity of data product in megabytes per day (ascii-gzipped) |
| **Data Format** | Special remarks on data packaging or formatting. |
| **Latency** | Elapsed time since the date of availability of the last data used in generating this product. |
| **Notes** | Descriptive, Explanatory or Processing notes as appropriate |

## I. 4 DATA PRODUCT SUMMARY

In this section, a summary of the all the data products, including the product identifiers, is given for reference.

| Source | XXX | LL | S | Definition |
|---|---|---|---|---|
| | | | | |
| IPU | GPS | 1A | A/B | GPS Flight Receiver Data (III.2.1) |
| | GNV | 1A | A/B | GRACE On-Board Orbit (III.2.2) |
| | CLK | 1A | A/B | Smoothed On-Board Clk Sol (III.2.3) |
| | KBR | 1A | A/B | K-Band Ranging Data (III.2.4) |
| | SCA | 1A | A/B | Star Camera Data (III.2.5) |
| | IHK | 1A | A/B | IPU Housekeping Data (III.2.6) |
| ACC | ACC | 1A | A/B | Accelerometer Science Data (III.3.1) |
| | AHK | 1A | A/B | Accmtr Housekeeping Data (III.3.2) |
| Satellite h/k & Others | TIM | 1A | A/B | OBDH to GPS Time Mapping (III.4.1) |
| | MAG | 1A | A/B | Magmtr & Mtq Data (III.4.2) |
| | THR | 1A | A/B | Thruster Activation Data (III.4.3) |
| | TNK | 1A | A/B | Tank Sensor Information (III.4.4) |
| | MAS | 1A | A/B | Satellite Mass Data (III.4.5) |
| | | | | |
| IPU | GPS | 1B | A/B | GPS Flight Receiver Data (IV.2.1) |
| | GNV | 1B | A/B | GRACE Orbit Solution (IV.2.2) |
| | CLK | 1B | A/B | Precise Clock Solution (IV.2.3) |
| | USO | 1B | A/B | USO Frequency Estimate (IV.2.4) |
| | KBR | 1B | X | Dual-One-Way Ranging Data (IV.2.5) |
| | SCA | 1B | A/B | Star Camera Solution (IV.2.6) |
| | IHK | 1B | A/B | IPU Housekeeping Data (IV.2.7) |
| ACC | ACC | 1B | A/B | Acceleration Data (IV.3.1) |
| | AHK | 1B | A/B | Acc Housekeeping Data (IV.3.2) |
| Satellite House-Keeping | MAG | 1B | A/B | Mag & Mtq Data (IV.4.1) |
| | THR | 1B | A/B | Thruster Activation Data (IV.4.2) |
| | TNK | 1B | A/B | Tank Sensor Information (IV.4.3) |
| | MAS | 1B | A/B | Spacecraft Mass Data (IV.4.4) |
| | TIM | 1B | A/B | OBDH to GPS-Time Map. (IV.4.5) |
| A-Priori Models | AOD | 1B | X | Atm-Ocean Gravity Model (IV.5.10) |
| | OCN | 1B | X | Ocean Pressure Model (IV.5.11) |
| Ground Analysis or Meas. | QSA | 1B | A/B | SCHeads Orient. wrt SRF (IV.5.1) |
| | QSB | 1B | A/B | Sat Frame Orient wrt SRF (IV.5.2) |
| | QKS | 1B | A/B | SCHeads Orient. wrt K-Frame (IV.5.3) |
| | VCM | 1B | A/B | CoMass Offset Estimate (IV.5.4) |
| | VGN | 1B | A/B | GPS Nav Antenna Offset (IV.5.5) |
| | VKB | 1B | A/B | K-Band Antenna Offset (IV.5.6) |

| | | | | |
|---|---|---|---|---|
| | VGO | 1B | A/B | GPS Occ Antenna Offset (IV.5.7) |
| | VGB | 1B | A/B | GPS Bkup Antenna Offset (IV.5.8) |
| | VSL | 1B | A/B | SLR Reflector Offset (IV.5.9) |
| | | | | |
| Level-2 Analysis | *xxx* | -2 | A/B | See V. 2 for Level-2 product nomenclature & attributes |

## I. 5 DEFINITIONS

This section provides the definitions in common use throughout this document.

### *I.5.1 Time Systems*

Three time systems are commonly used in this document.

#### I.5.1.1 Receiver Clock Time

The USO on board each spacecraft serves as the frequency and time reference for that GRACE satellite. The USO reference frequency is used to generate a near 38 MHz signal on-board, which, in turn, is used to sample both the GPS and KBR phase measurements. The transitions of the GPS zenith (navigation) antenna sampler define the receiver clock time. It is understood in the remainder of this document that the Receiver Clock Time refers to its specific realization on board each spacecraft.

The KBR and GPS measurements are time-tagged to within 50 picoseconds of the receiver clock time. The ACC and other data are time-tagged to within 100 microseconds of the receiver clock time. The receiver clock time, on board, is reckoned in seconds from the epoch of Jan 6, 1980. However, in Level-1A and Level-1B products, the time-tags in this time system will be given in seconds since epoch Jan 01, 2000, 1200 hrs.

#### I.5.1.2 GPS Time

The GPS Time is used as defined in the ICD-GPS-200 (Rockwell Int. Corp, Sep 1984). The process of orbit determination and clock correction using the GPS navigation & ground system data provides the connection between the receiver clock time and GPS time. GPS time is generally reckoned in weeks and seconds in week since Jan 6, 1980. However, in Level-1A and Level-1B products, time-tags in this time system will be given in seconds since epoch Jan 01, 2000, 1200 hrs.

#### I.5.1.3 Coordinated Universal Time (UTC)

The UTC is used as defined by the International Radio Consultative Committee (CCIR) Recommendation 460-4 (1986), and as maintained by the IERS.

#### I.5.1.4 Additional Note on OBDH Time

At certain places in this document, the “OBDH Time” terminology is used. This specialized notation is needed because of the timing interfaces on board the GRACE satellites between the GPS receiver and the On-Board Data Handler (OBDH), and its effect on the time-tagging of the Accelerometer & satellite housekeeping data. The understanding of this mapping is not relevant in general to the user, and this concept is

included only because keeping a record of the TIM1A and TIM1B data products is useful for Level-1 processing.

### *I.5.2 Coordinate Systems*

Several coordinate systems are used to define the various GRACE data products. The definitions are summarized in this section. The satellite body-fixed frames are shown in Figure I-2.

#### I.5.2.1 Science Reference Frame (SRF)

All Level-1B data products are specified in the Science Reference Frame (SRF). This reference frame is defined to have its origin at the center of mass of the satellite. The axes are directed by parallel to the measurement axes of the Accelerometer, such that

$$x_{SRF} \parallel z_{ACC}$$
$$y_{SRF} \parallel x_{ACC} \quad \text{(ACC least sensitive axis)}$$
$$z_{SRF} \parallel y_{ACC}$$

This reference frame is realized through the Star Camera head orientation quaternions, where the precise orientation of the star camera heads to the SRF is calculated as a result of the K-Band Calibration Maneuvers and pre-flight measurements. The origin is maintained by a Center of Mass Calibration & Trim maneuver.

#### I.5.2.2 K-Frame (KF)

With an origin coincident with the Science Reference Frame, the axes of the K-Frame are directed as follows

$$x_{KF} = \text{Line joining Satellite CM to K - Band antenna phase center}$$
$$y_{KF} \parallel z_{KF} \times x_{KF}$$
$$z_{KF} \parallel x_{KF} \times y_{SRF}$$

The K-Frame is realized, in conjunction with the SRF, as a result of the K-Band Calibration Maneuver. In the Science Modes, the spacecraft attitude control system attempts to point the $x_{KF}$ axis of each satellite towards a target location of the other satellite.

#### I.5.2.3 Satellite Frame (SF)

With its origin at a target location for the center of mass of the proof mass of the Accelerometer, the Satellite Frame has its coordinate axes directed as follows:

$x_{SF}$ = From the origin to a target location of the phase center on the boresight the K/Ka Band horn (Roll Axis);

$y_{SF}$ = Forms a right-handed triad with $x_{SF}$ and $z_{SF}$ (Pitch Axis);

$z_{SF}$ = Normal to $x_{SF}$ and to the plane of the main equipment platform, and positive towards the satellite radiator (Yaw Axis)

The satellite frame was used as the basis for satellite assembly and payload unit alignment orientation on the ground.

During flight, the satellites have nadir-pointing Yaw axis orientation, with the Roll axes in the anti-flight and in-flight directions for the leading and trailing satellites, respectively.

#### I.5.2.4 Accelerometer Frame (AF)

With its origin at the center of mass of the proof mass of the ACC, the Accelerometer Frame is realized by the reference optical marks on the exterior surface. The accelerometer is accommodated such that:

$$x_{ACC} \parallel y_{SF} \quad \text{(ACC least sensitive axis)}$$
$$y_{ACC} \parallel z_{SF}$$
$$z_{ACC} \parallel x_{SF}$$

#### I.5.2.5 Star Camera Frame (SCF)

Each GRACE satellite carries two star camera assemblies. The origin of each Star Camera Frame is at the intersection of the optical axis (boresight) with the mounting plane for the star camera head. The Star Camera Head nomenclature is given in Section I.5.3.1. The axes are directed as follows, relative to the Satellite Frame (Figure I-2):

*Star Camera ID=1*

This star camera has its optical axis ( $z_{SCF_1}$ ) in the $+y_{SF}/-z_{SF}$ quadrant, pointed nominally at 45° from the ( $-z_{SF}$ ) direction. The $x_{SCF_1}$ axis is parallel to the satellite ( $x_{SF}$ ) axis.

*Star Camera ID=2*

This star camera has its optical axis ( $z_{SCF_2}$ ) in the $-y_{SF}/-z_{SF}$ quadrant, pointed nominally at 45° from the ( $-z_{SF}$ ) direction. The $x_{SCF_2}$ axis is parallel to the satellite ( $x_{SF}$ ) axis.

#### I.5.2.6 Inertial Frame

In this document, the Inertial Frame refers to the International Celestial Reference System (ICRS), with the reference frame realized by the J2000.0 Equatorial Coordinates.

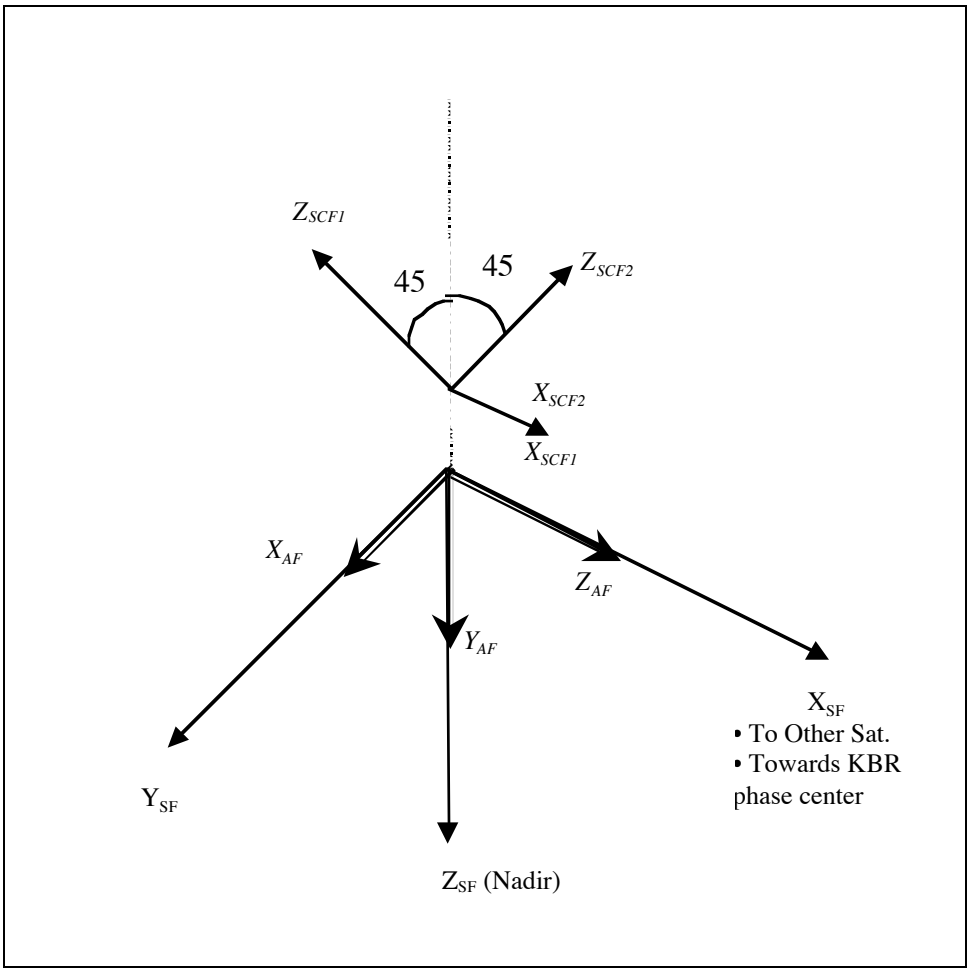


**Figure I-2 Satellite body-fixed reference frames, with their origin at the Center of Mass of the proof-mass of the accelerometer.**

### I.5.2.7 Terrestrial Frame

In this document, the Terrestrial Frame refers to the Conventional Terrestrial Reference System, realized by the International Terrestrial Reference Frames as per the processing standards.

### I.5.2.8 WGS84 Coordinates

The WGS84 are Earth-Centered, Earth-Fixed coordinates whose transformation with respect to the Terrestrial Frame is generally well known in the literature.

### I.5.2.9 Important Usage Note

The diverse reference frames have been retained for compatibility with pre-flight alignment measurements, and other assembly activities at the payload unit or the satellite level. However, in general, all analysis pertaining to the satellite is carried out in the

Science Reference Frame within the SDS, and the Level-1B data are referenced relative to the SRF. By design, the Accelerometer is stably aligned relative to the Star Cameras, and this alignment is well calibrated with in-flight experiments. In conjunction with the K-Band calibration, the ranging and acceleration data is specified in a well-known Science Reference Frame. The coordinate system for each product is explicitly stated in addition, so that there is no ambiguity.

### *I.5.3 Satellite Description*

In this section, certain attributes and useful properties of the twin GRACE satellites are described. In general, dimensions, locations and orientations in this section are provided in the Satellite Frame – unless otherwise specified. The distinction between the SF and the SRF should not be important for most of the conceived uses of the information in this section – the two may be regarded as the same here.

#### I.5.3.1 Satellite Nomenclature

The twin GRACE satellites are identical in every respect, except for the differences in the oscillator reference & the S-Band communication frequencies. The satellite & instruments designation is as follows:

| Description | Identifier | |
|---|---|---|
| Science Nomenclature | GRACE-A | GRACE-B |
| Operations Nomenclature (GSOC) | GRACE-1 | GRACE-2 |
| Satellite System Nomenclature (Astrium) | FM-1 | FM-2 |
| USO Frequency | 4.832000 MHz | 4.832099 MHz |
| Downlink Carrier Frequency | 2211.000 MHz | 2260.800 MHz |
| Uplink Carrier Frequency | 2051.000 MHz | 2073.500 MHz |
| Relative position after launch | Leading | Trailing |
| Star Camera Heads | ID=1 or CHU9 | ID=1 or CHU7 |
| | ID=2 or CHU1 | ID=2 or CHU3 |
| Accelerometer | FM1 | FM2 |
| | | |
| | | |
| | | |
| | | |

This information is superseded, in the event of a conflict, by the information in the Mission Plan Document (327-210) or the Satellite System Specification Document (GR-DSS-SP-001).

#### I.5.3.2 Thruster Accommodation

Each GRACE satellite has twelve 10mN GN2 thrusters for attitude control, and two 40 mN GN2 thrusters for orbit control. The thruster number, thruster ID, location (in **mm**

relative to the Satellite Frame), nominal force (in **m**illi**N**ewtons), intended direction of control (**R**oll, **P**itch & **Y**aw relative to Satellite Frame), and firing directions (pointing **Ptg** in Satellite Frame) are as follows :

| No. | ID | Location (mm) | | | Force (mN) | | | Ctrl | Ptg |
|---|---|---|---|---|---|---|---|---|---|
| | | X | Y | Z | X | Y | Z | | |
| 1 | A11 | -1450 | -719 | 0 | 0 | 10 | 0 | Y(-) | -Y |
| 2 | A12 | -1450 | 0 | -444 | 0 | 0 | 10 | P(+) | -Z |
| 3 | A13 | -1450 | 719 | 0 | 0 | -10 | 0 | Y(+) | +Y |
| 4 | A14 | -1450 | 0 | 275 | 0 | 0 | -10 | P(-) | +Z |
| 5 | A15 | 0 | -970 | 300 | 0 | 10 | 0 | R(-) | -Y |
| 6 | A16 | 0 | -467 | -300 | 0 | 10 | 0 | R(+) | -Y |
| | | | | | | | | | |
| 7 | A21 | 1450 | 719 | 0 | 0 | -10 | 0 | Y(-) | +Y |
| 8 | A22 | 1450 | 0 | 275 | 0 | 0 | -10 | P(+) | +Z |
| 9 | A23 | 1450 | -719 | 0 | 0 | 10 | 0 | Y(+) | -Y |
| 10 | A24 | 1450 | 0 | -444 | 0 | 0 | 10 | P(-) | -Z |
| 11 | A25 | 0 | 467 | -300 | 0 | -10 | 0 | R(-) | +Y |
| 12 | A26 | 0 | 970 | 300 | 0 | -10 | 0 | R(+) | +Y |
| | | | | | | | | | |
| 13 | O11 | -1561 | -275 | 0 | 39.4 | 6.9 | 0 | dV | -X |
| 14 | O21 | -1561 | 275 | 0 | 39.4 | -6.9 | 0 | dV | -X |

This information is superseded, in the event of a conflict, by the information in the Satellite Specification Document (GR-DSS-SP-001).

### I.5.3.3 GRACE Macro Model: Mass

The two GRACE satellites, in general, are identical to each other. All except certain key aspects of the physical properties of the GRACE satellite (the so-called Macro Model) are hence provided for only one satellite.

*Satellite Mass at Launch*

GRACE-A: 487.2 kg
GRACE-B: 487.2 kg

Mass values are updated during the mission, and provided in the MAS1A and MAS1B data products.

#### I.5.3.4 GRACE Macro Model: Exterior Dimensions

The following two figures show the exterior dimensions of the GRACE spacecrafts.

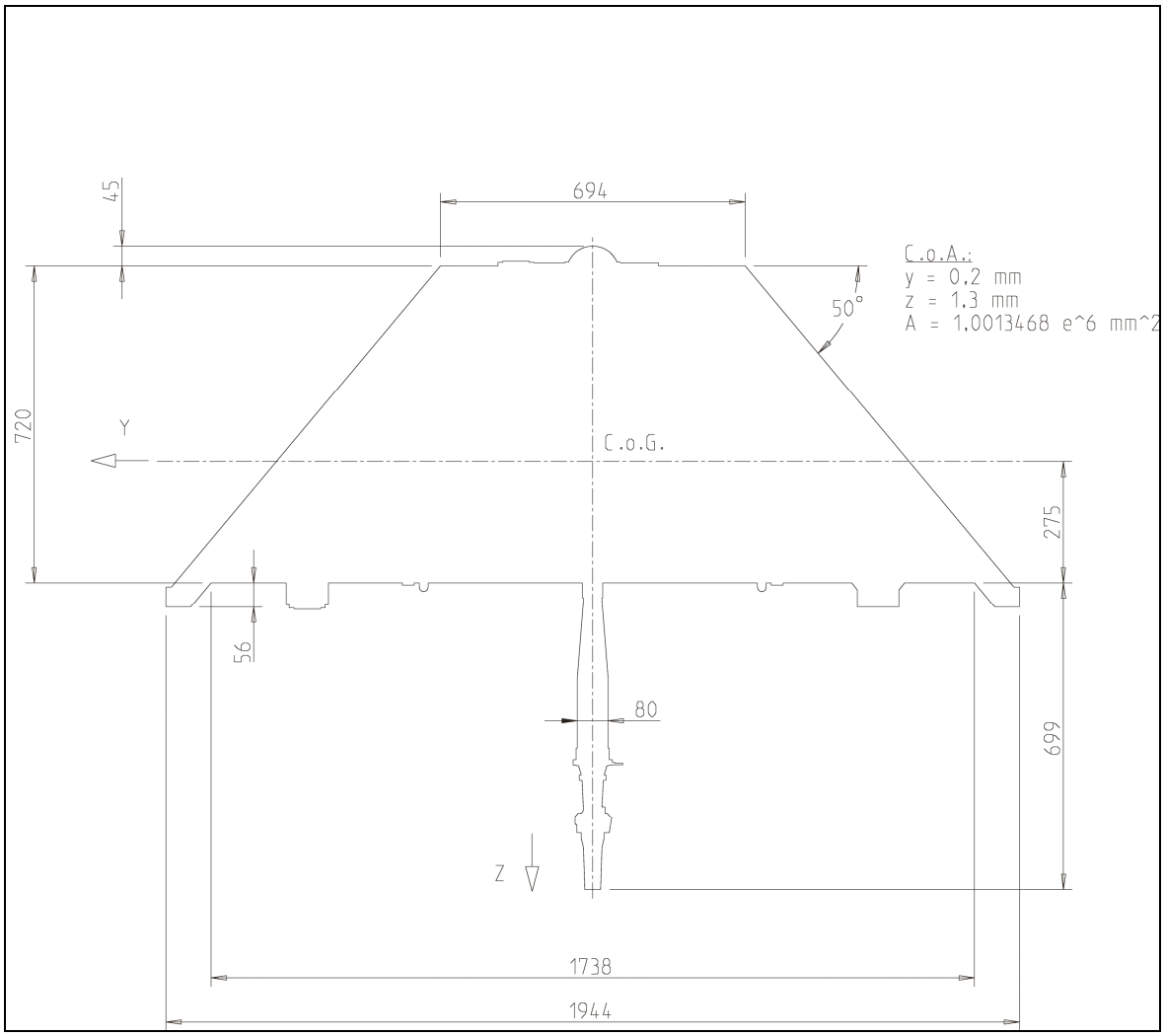


**Figure 3 Projection in Y-Z plane in Satellite Frame (view from front). (All dimensions in mm)**

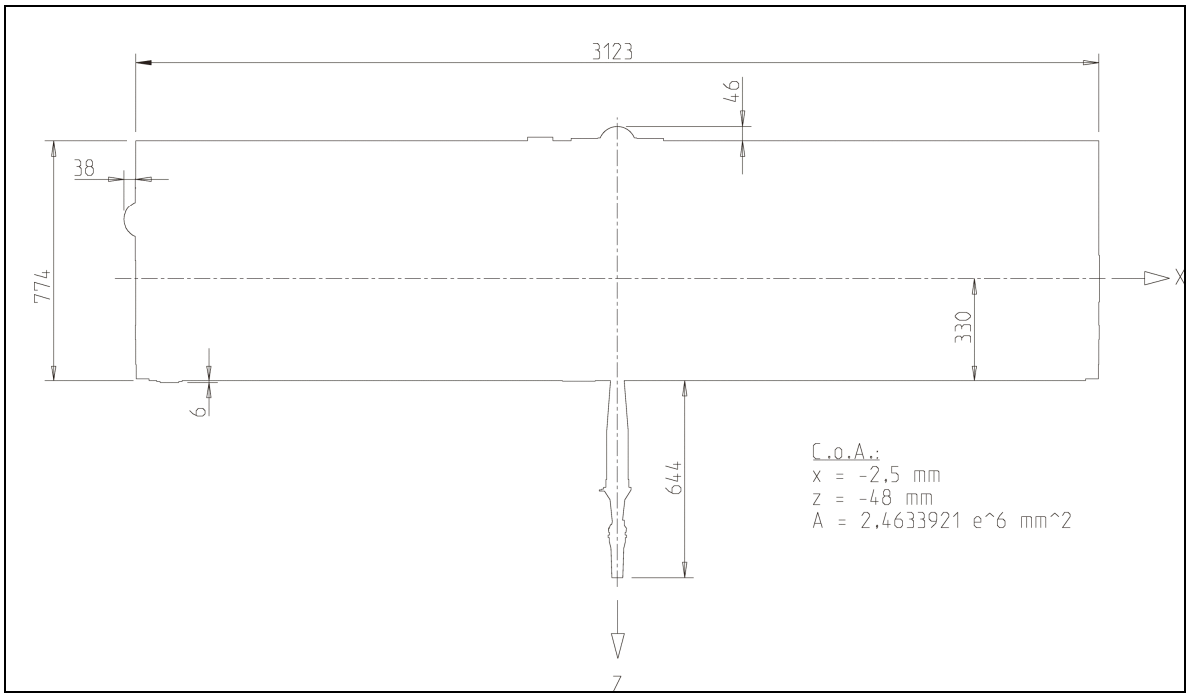


**Figure 4 Projection in X-Z plane in Satellite Frame (view from Port) (All dimensions in mm)**

### I.5.3.5 GRACE Macro Model: Surface Properties

The surface properties are summarized in the following table. For each surface, the area, the components of its unit normal in the Satellite Frame, the material, as well as its emissivity and absorptivity/reflectivity coefficients are provided.

| Panel | Area ($m^2$) | Unit Normal | | | Material | Emiss (IR) | Absorp (Vis) | Refl (Vis) | | Refl (IR) | |
|---|---|---|---|---|---|---|---|---|---|---|---|
| | | X | Y | Z | | | | Geom | Diff | Geom | Diff |
| Front | 0.9551567 | +1.0 | 0.0 | 0.0 | SiOx/Kapton | 0.62 | 0.34 | 0.40 | 0.26 | 0.23 | 0.15 |
| Rear | 0.9551567 | -1.0 | 0.0 | 0.0 | SiOx/Kapton | 0.62 | 0.34 | 0.40 | 0.26 | 0.23 | 0.15 |
| Starboard (outer) | 3.1554792 | 0.0 | +0.766044 | -0.642787 | Si Glass Solar Array | 0.81 | 0.65/0.72 (note 2) | 0.05 | 0.30 | 0.03 | 0.16 |
| Starboard (inner) | 0.2282913 | 0.0 | -0.766044 | +0.642787 | SiOx/Kapton | 0.62 | 0.34 | 0.40 | 0.26 | 0.23 | 0.15 |
| Port (outer) | 3.1554792 | 0.0 | -0.766044 | -0.642787 | Si Glass Solar Array | 0.81 | 0.65/0.72 (note 2) | 0.05 | 0.30 | 0.03 | 0.16 |
| Port (inner) | 0.2282913 | 0.0 | +0.766044 | +0.642787 | SiOx/Kapton | 0.62 | 0.34 | 0.40 | 0.26 | 0.23 | 0.15 |
| Nadir | 6.0711120 | 0.0 | 0.0 | +1.0 | Teflon (note 1) | 0.75 | 0.12 | 0.68 | 0.20 | 0.19 | 0.06 |
| Zenith | 2.1673620 | 0.0 | 0.0 | -1.0 | Si Glass Solar Array | 0.81 | 0.65/0.72 | 0.05 | 0.30 | 0.03 | 0.16 |
| Boom | 0.0461901 (note 4) | -- | -- | -- | SiOx/Kapton (note 3) | 0.62 | 0.34 | 0.40 | 0.26 | 0.23 | 0.15 |

(1) fluoro ethylene propylene
(2) 0.65 for operating solar array (i.e. power being drawn); 0.72 for non-operating array
(3) S-Band antenna on the boom is protected by a carbon radome (emiss = 0.85; absorp = 0.95), neglected here.
(4) Planar projection area of the cylindrical Boom, along any direction in the Satellite Frame (X-Y) plane.

#### I.5.3.6 GRACE Macro Model: Antenna Locations

The nominal locations of the instruments are provided here in the Satellite Frame.

| Antenna | Location (mm) | | | Remark |
|---|---|---|---|---|
| | X | Y | Z | |
| GPS Main | 0 | 0 | -444 | Mechanical reference point at outer plane. Product VGN1B contains precise L1/L2 phase center locations. |
| GPS Backup | -1561.25 | -300 | -190 | Mechanical reference point at outer plane. Product VGN1B contains precise L1/L2 phase center locations. |
| GPS Occultation | -1561.25 | 0 | -190 | Mechanical reference point at outer plane. Product VGN1B contains precise L1/L2 phase center locations. |
| SLR Reflector | -600 | -327.5 | 217.8 | The Z value already includes a 4 mm (additive) correction to the LRR optical phase center. |
| KBR Horn | 1561.25 | 0 | 0 | Mechanical reference point at outer plane – location of phase center is contained in product VKB1B. |

#### I.5.3.7 Usage Note on Satellite Sensor Locations

Several products in this document provide the satellite or instrument housekeeping sensor measurements, such as temperatures and voltages. Detailed information about these sensors, including their locations or characteristics, are not provided in this document, but are available in various detailed unit or system level documentation.

In particular, should it become necessary to use such data for analysis, the complete usage guidelines for all such products will be provided in a self-contained manner.

### *I.5.4 Related Documents*

For further details on the contents of the Level-1A and Level-1B products, as well as product interpretation and usage guidelines, the user may consult the *Level-1 User Handbook* and the *Level-1 Formats Document*.

Further details on the Level-2 products, and notes on interpretation are available in the *Level-2 User Handbook*. The models used for Level-2 data processing are in the *Level-2 Processing Standards Documents*.

# II LEVEL-0 DATA PRODUCTS

## II. 1 INTRODUCTION

This chapter contains the specification of the GRACE Level-0 data products. The GRACE RDC is responsible for the decommutation of the down-link data from each satellite into the respective science and housekeeping data streams. For each pass, from each satellite, the data streams are placed in two files, one containing the science data, and the other containing the housekeeping data. These files are placed in a rolling archive at the RDC. The GRACE SDS then retrieves these files, and thereon proceeds with the higher level processing activities.

The Level-0 data products are understood to be the two files for each satellite. The following two sections describe the contents of these data products. For completeness, however, the Appendix I contains a description of the content and formats of the individual Communication Packets (CP) and Application Packets (AP) which make up the two streams. This latter description is superseded, in the event of a conflict, by the description of the APs and CPs in the relevant on-board software and instrument specification documents.

*Remark*: Although the Appendix I identifies several "Products", it should be clearly noted that these products are neither created nor stored, nor made available as such. The Level-0 TM files lead directly to the Level-1A products, and the "product" nomenclature is used here as a mnemonic aid to the CPs or the APs contained within the TM files.

## II. 2 SCIENCE DATA

The Science Data stream is defined in the On-Board Software Data Interfaces & Data Flow Document (GR-DJO-SW-0005). In summary, this file contains a stream of Time Stamp Packet (ID=255), each followed by the science Application Packets from the IPU (ID=250 or 251) and from the ICU (ID=252 or 253). Within each application packet are contained the Communication Packets from the source instrument. For reference, the names and contents of the relevant CPs are described in Appendix I.

## II. 3 HOUSEKEEPING DATA

The Housekeeping Data stream is built up of data from various satellite instrument and software sub-systems by the OBDH. The stream of Time Stamp Packets is followed by various Application Packets, with ID in the range 160 to 255, excluding the science application packets. The contents of this file are also defined in GR-DJO-SW-0005.

# III LEVEL-1A DATA PRODUCTS

## III. 1 INTRODUCTION

The Level-0 data are acquired by the SDS from a rolling archive at the GRACE RDC. The data are then separated into respective instrument packets. The sensor calibration factors are applied to convert the data to engineering units, and data quality flags are added. Where necessary, the time tags are corrected to the respective satellite receiver clock time.

This reformatted data is denoted as the Level-1A product. The transition from Level-0 to Level-1A is non-destructive, and generally reversible except for the bad data packets. This chapter, besides the specification of the Level-1A data, also contains a description of the ancillary GRACE mission specific data inputs needed for Level-1 data processing.

## III. 2 IPU DATA

This section contains a description of the Level-1A data originating in the IPU.

### *III.2.1 GPS Flight Receiver Data*

| | |
|---|---|
| **Product Identifier** | **GPS1A_(DATE)_A_RL**<br>**GPS1A_(DATE)_B_RL** |
| **Product Definition** | • Time tag<br>• Antenna indicator, PRN indicator & data flags.<br>• One or more of CA, L1 & L2 data receiver channels, & for each, its SNR, carrier phase & pseudo-range measurement. |
| **Representation** | Time-tag: Seconds past 12:00:00 (noon) 01-Jan-2000 |
| **Units** | Time: Seconds<br>Phase: meters<br>Pseudo-range: meters |
| **System** | Time Tag: Receiver Clock Time ( within 70 picoseconds) |
| **Resolution** | *Nav Antenna Data:* Code & SNR @ 10 sec; Phase @ 1 sec.<br>*Occ Antenna Data:* 50 Hz L1/L2 carrier phase & amplitude |
| **Inputs** | Level-0 GPS data from IPU |
| **Data Volume** | 34 Mbytes/day/sat |
| **Data Format** | Level-1A Data Format: **GFD1X** |
| **Latency** | 24 hours |
| **Notes** | 30 hr data files (3 hr padding on daily file). |

### *III.2.2 GPS On-Board Orbit Ephemerides*

| | |
|---|---|
| **Product Identifier** | **GNV1A_(DATE)_A_RL**<br>**GNV1A_(DATE)_B_RL** |
| **Product Definition** | The on-board, IPU navigation solution, including<br>• Solution Time<br>• Chi-Squared & Covariance Precision Multiplier<br>• Clock steering voltage<br>• Receiver position & offset between GPS & Receiver time<br>• Formal error in receiver position & time offset<br>• Receiver velocity & time offset rate<br>• Formal error in receiver velocity & time offset rate<br>• PRN's used in solution, including their azimuth & elevation values |
| **Representation** | Time-tag : Seconds past 12:00:00 (noon) 01-Jan-2000 |
| **Units** | Solution Time: Seconds<br>Position & Velocity: m and m/second<br>Time offset & offset rates: seconds & sec/sec<br>Others: Dimensionless |
| **System** | Solution Time: Receiver Clock Time<br>Position & Velocity: WGS-84 |
| **Resolution** | 60 seconds (all data) |
| **Inputs** | Level-0 GPS receiver data |
| **Data Volume** | < 3.5 Mbyte/day/sat |
| **Data Format** | Level-1A File Format: **GNV1A** |
| **Latency** | 24 hours |
| **Notes** | Data from one day is stored in one file |

### *III.2.3 Smoothed On-Board Clock Solution*

| | |
|---|---|
| **Product Identifier** | **CLK1A_(DATE)_A_RL**<br>**CLK1A_(DATE)_B_RL** |
| **Product Definition** | Offset of the satellite receiver clock relative to GPS time, obtained by linear fit to raw on-board clock offset estimates. |
| **Representation** | Time-tag : Seconds past 12:00:00 (noon) 01-Jan-2000 |
| **Units** | Solution Time: Seconds<br>Time offset & offset rates: seconds & sec/sec |
| **System** | Time tag: Receiver Clock Time |
| **Resolution** | 60 seconds |
| **Inputs** | GNV1A |
| **Data Volume** | 5 Kbyte/day/sat |
| **Data Format** | Level-1A File Format: **CLK1B** |
| **Latency** | 24 hours |
| **Notes** | 30 hr data files (3 hr padding on daily file). |

### *III.2.4 K-Band Ranging Data*

| | |
|---|---|
| **Product Identifier** | **KBR1A_(DATE)_A_RL**<br>**KBR1A_(DATE)_B_RL** |
| **Product Definition** | • Time tag<br>• K & Ka frequency integrated carrier phase<br>• K & Ka band SNR |
| **Representation** | Time tag: Seconds past 12:00:00 (noon) 01-Jan-2000 |
| **Units** | Time Tag: Seconds<br>Phase: cycles<br>SNR: volts/volt |
| **System** | Time Tag: Receiver Clock Time<br>Phase: N/A |
| **Resolution** | 0.1 seconds (all phase data) |
| **Inputs** | Level-0 IPU data |
| **Data Volume** | 20 Mbytes/day/sat |
| **Data Format** | Level-1A File Format: **GFD1X** |
| **Latency** | 1 day |
| **Notes** | All data from one Day are stored together. |

### *III.2.5 Star Camera Data*

| | |
|---|---|
| **Product Identifier** | **SCA1A_(DATE)_A_RL**<br>**SCA1A_(DATE)_B_RL** |
| **Product Definition** | • Time Tag & SCA head indicators<br>• Quaternions specifying the inertial orientation of both Star Camera Heads.<br>• Housekeeping data |
| **Representation** | Time-tag: Seconds past 12:00:00 (noon) 01-Jan-2000<br>Quaternions: I/J/K components & the cosμ/2 component |
| **Units** | Time Tag: Seconds<br>Quaternions: N/A |
| **System** | Time Tag: Receiver Clock Time<br>Quaternions: N/A |
| **Resolution** | Prime Star Camera Quaternions: 1 second<br>Secondary Star Camera Quaternions: 1 seconds (variable) |
| **Inputs** | Level-0 SCA data from the IPU |
| **Data Volume** | 8 Mbytes/day/sat |
| **Data Format** | Level-1A File Format: **SCA1A** |
| **Latency** | 1 day |
| **Notes** | 30 hr data files (3 hr padding on daily file). |

### *III.2.6 IPU Housekeeping Data*

| | |
|---|---|
| **Product Identifier** | **IHK1A_(DATE)_A_RL**<br>**IHK1A_(DATE)_B_RL** |
| **Product Definition** | • Time tag<br>• IPU, SPU & SCA power supply voltages<br>• IPU, MWA & KBR temperatures<br>• KBR Switch settings |
| **Representation** | (TBD) |
| **Units** | Time: GPS Time<br>Temp: °C<br>Voltages: Volt |
| **System** | (TBD) |
| **Resolution** | (TBD) |
| **Inputs** | (TBD) |
| **Data Volume** | (TBD) |
| **Data Format** | Level-1A File Format: **IHK1X** |
| **Latency** | 1 day |
| **Notes** | All data from one Day are stored together. |

## III. 3 ICU DATA

This section contains a description of the Level-1A data originating in the ICU.

### *III.3.1 Acceleration Science Data*

| | |
|---|---|
| **Product Identifier** | **ACC1A_(DATE)_A_RL**<br>**ACC1A_(DATE)_B_RL** |
| **Product Definition** | • Time-tag: Time of data acquisition from the accelerometer.<br>• Linear acceleration components of ACC proof mass relative to its electrode cage built up in 100 milliseconds following TTAG.<br>• Angular acceleration components of ACC proof mass relative to its electrode cage built up in 100 milliseconds following TTAG. |
| **Representation** | N/A |
| **Units** | Timetag: Seconds<br>Linear Accelerations: $m/s^2$<br>Angular Accelerations: $rad/s^2$ |
| **System** | Timetag: Receiver Clock Time ( within 100 micro-seconds)<br>Linear & Angular Accelerations: Accelerometer Frame |
| **Resolution** | Time-Tag: 0.1 seconds<br>Linear Accelerations: 0.1 seconds<br>Angular Accelerations: 1.0 seconds |
| **Inputs** | Level-0 Accelerometer Data<br>Spacecraft Time Stamp Packets<br>Sensor calibration factors |
| **Data Volume** | 30 Mbytes/day/sat |
| **Data Format** | Level-1A File Format: **ACC1A** |
| **Latency** | 1 day |
| **Notes** | All data from one Day are stored together. |

### *III.3.2 Accelerometer Housekeeping Data*

| | |
|---|---|
| **Product Identifier** | **AHK1A_(DATE)_A_RL**<br>**AHK1A_(DATE)_B_RL** |
| **Product Definition** | • Time-tag: Time of data acquisition from the accelerometer.<br>• Proof-mass bias voltage, Capacitive Sensor output & working order<br>• ICU & SU temperatures, reference voltages & primary and secondary power supply voltage. |
| **Representation** | N/A |
| **Units** | Timetag: Seconds<br>Temperatures: °C<br>Voltages : Volts |
| **System** | Timetag: Receiver Clock Time ( within 100 micro-seconds) |
| **Resolution** | Bias Voltage & Capacitive Sensor output : 10 seconds<br>Others : 60 seconds |
| **Inputs** | Level-0 Accelerometer Data<br>Spacecraft Time Stamp Packets<br>Sensor calibration factors |
| **Data Volume** | < 1 Mbytes/day/sat |
| **Data Format** | Level-1A File Format: **ACC1A** |
| **Latency** | 1 day |
| **Notes** | All data from one Day are stored together. |

## III. 4 SPACECRAFT HOUSEKEEPING DATA

This section defines the products extracted from the spacecraft housekeeping data stream, which are useful for generation of products at subsequent levels. This also includes additional intermediate products, derived from some mix of house-keeping and ground analyses results.

### *III.4.1 OBDH to GPS Time Mapping*

| | |
|---|---|
| **Product Identifier** | **TIM1A_(DATE)_A_RL**<br>**TIM1A_(DATE)_B_RL** |
| **Product Definition** | Mapping between the time kept by the & GPS time determined by the IPU |
| **Representation** | Time-tag : Seconds past 12:00:00 (noon) 01-Jan-2000 |
| **Units** | Solution Time: Seconds<br>Time offset & offset rates: seconds & sec/sec |
| **System** | Time tag: Receiver Clock Time |
| **Resolution** | 60 seconds |
| **Inputs** | GNV1A |
| **Data Volume** | < 1 Mbyte/day/sat |
| **Data Format** | Level-1A File Format: **TIM1X** |
| **Latency** | 24 hours |
| **Notes** | Data from one Day is stored in one file |

### *III.4.2 Magnetometer & Magnetorquer Data*

| | |
|---|---|
| **Product Identifier** | **MAG1A_(DATE)_A_RL**<br>**MAG1A_(DATE)_B_RL** |
| **Product Definition** | • X/Y/Z measured components of Earth magnetic fields<br>• Magnetorquer currents |
| **Representation** | N/A |
| **Units** | Time tag: seconds<br>MAG: nano-Tesla<br>MTQ currents: Amps |
| **System** | Time Tag: On-board receiver time<br>MAG: In Satellite Frame |
| **Resolution** | 60 second |
| **Inputs** | Spacecraft housekeeping data |
| **Data Volume** | < 1 Mbytes/day/sat |
| **Data Format** | Level-1B file format: **MAG1X** |
| **Latency** | 24 hours |
| **Notes** | |

### *III.4.3 Thruster Activation Data*

| | |
|---|---|
| **Product Identifier** | **THR1A_(DATE)_A_RL**<br>**THR1A_(DATE)_B_RL** |
| **Product Definition** | • Activation Time Tag<br>• Cumulative work cycles for all thrusters<br>• On-Time for present activation for all thrusters<br>• Cumulative on-time for all thrusters |
| **Representation** | 32-bit fixed point, so that the cumulative numbers wrap around at 4294967295 (= $2^{32}$-1) |
| **Units** | Time tag: seconds<br>On-Time: milli-seconds |
| **System** | Time: On-board receiver time |
| **Resolution** | At each thruster activation epoch |
| **Inputs** | Level-0 spacecraft housekeeping data |
| **Data Volume** | < 1Mbytes/day/sat average |
| **Data Format** | Level-1B file format: **THR1X** |
| **Latency** | 24 hours |
| **Notes** | See section I.5.3.2 for accomodation & firing direction of thrusters |

### *III.4.4 Tank Sensor Information*

| | |
|---|---|
| **Product Identifier** | **TNK1A_(DATE)_A_RL**<br>**TNK1A_(DATE)_B_RL** |
| **Product Definition** | • Time Tag<br>• Pressures : Tank internal & at pressure regulator<br>• Temperatures: Skin & tank adaptor temperature |
| **Representation** | N/A |
| **Units** | Time tag: seconds<br>Pressure: Bars<br>Temperature: °C |
| **System** | Time: On-board receiver time |
| **Resolution** | 60 seconds |
| **Inputs** | Level-0 spacecraft housekeeping data |
| **Data Volume** | < 1 Mbytes/day/sat average |
| **Data Format** | Level-1B file format: **TNK1X** |
| **Latency** | 24 hours |
| **Notes** | See Satellite Specification Document for locations of the temperature & pressure sensors. |

### *III.4.5 Satellite Mass Information*

| | |
|---|---|
| **Product Identifier** | **MAS1A_(DATE)_A_RL**<br>**MAS1A_(DATE)_B_RL** |
| **Product Definition** | • Time Tag<br>• Spacecraft mass & error estimate based on thruster usage<br>• Spacecraft mass & error estimate based on tank sensors |
| **Representation** | N/A |
| **Units** | Time tag: seconds<br>Mass : kg |
| **System** | Time: On-board receiver time |
| **Resolution** | TBD |
| **Inputs** | TNK1A & THK1A |
| **Data Volume** | < 1Mbyte/day/sat (average) |
| **Data Format** | Level-1B file format: **MAS1X** |
| **Latency** | 24 hours |
| **Notes** | |

# IV LEVEL-1B DATA PRODUCTS

## IV. 1 INTRODUCTION

The Level-1B data products are derived from the (possibly irreversible) processing of the data products from previous levels. The data will have been edited and decimated from the high rate samples of the instrument to the low rate samples useable for further science analysis. In addition to the spacecraft data, this chapter also contains a description of the GRACE specific data products generated by the GRACE SDS for further processing to higher levels.

## IV. 2 IPU DATA

This section contains a description of the Level-1B data largely originating in the IPU.

### *IV.2.1 GPS Flight Receiver Data*

| | |
|---|---|
| **Product Identifier** | **GPS1B_(DATE)_A_RL**<br>**GPS1B_(DATE)_B_RL** |
| **Product Definition** | • Time tag<br>• Antenna indicator, PRN indicator & data flags.<br>• One or more of CA, L1 & L2 data receiver channels, & for each, its SNR, carrier phase & pseudo-range measurement. |
| **Representation** | Time-tag: Seconds past 12:00:00 (noon) 01-Jan-2000 |
| **Units** | Time: Seconds<br>Phase: meters<br>Pseudo-range: meters |
| **System** | Time Tag: GPS Time |
| **Resolution** | *Nav Antenna Data:* 10 seconds |
| **Inputs** | Level-1A GPS data from IPU & ancillary data |
| **Data Volume** | 4 Mbytes/day/sat |
| **Data Format** | Level-1B Data Format: **GFD1X** |
| **Latency** | 1 day |
| **Notes** | Data from one Day is stored in one file. |

### *IV.2.2 Precise GRACE Satellite Orbit Ephemerides*

| | |
|---|---|
| **Product Identifier** | **GNV1B_(DATE)_A_RL**<br>**GNV1B_(DATE)_B_RL** |
| **Product Definition** | The precise orbit information, including<br>• Solution Time<br>• Receiver position & velocity<br>• Formal error in receiver position & velocity |
| **Representation** | Time-tag : Seconds past 12:00:00 (noon) 01-Jan-2000 |
| **Units** | Solution Time: Seconds<br>Position & Velocity: m and m/second |
| **System** | Solution Time: GPS Time<br>Position & Velocity: Inertial or Terrestrial Frame (as flagged) |
| **Resolution** | 30 seconds |
| **Inputs** | Level-1A GPS receiver & ancillary data |
| **Data Volume** | < 1 Mbyte/day/sat |
| **Data Format** | Level-1B File Format: **GNV1B** |
| **Latency** | ≈ 12 days |
| **Notes** | Data from one Day is stored in one file |

### *IV.2.3 Precise Clock Solution*

| | |
|---|---|
| **Product Identifier** | **CLK1B_(DATE)_A_RL**<br>**CLK1B_(DATE)_B_RL** |
| **Product Definition** | Offset of the satellite receiver clock relative to GPS time. |
| **Representation** | Time-tag : Seconds past 12:00:00 (noon) 01-Jan-2000 |
| **Units** | Solution Time: Seconds<br>Time offset: seconds |
| **System** | Time tag: Receiver Clock Time |
| **Resolution** | 30 seconds |
| **Inputs** | Level-1A GPS receiver & ancillary data |
| **Data Volume** | < 1 Mbyte/day/sat |
| **Data Format** | Level-1B File Format: **CLK1B** |
| **Latency** | ≈ 12 days |
| **Notes** | Data from one Day is stored in one file |

### *IV.2.4 USO Frequency Estimate*

| | |
|---|---|
| **Product Identifier** | **USO1B_(DATE)_A_RL**<br>**USO1B_(DATE)_B_RL** |
| **Product Definition** | • Time tag & USO ID<br>• Frequency of the USO. |
| **Representation** | Time-tag : Seconds past 12:00:00 (noon) 01-Jan-2000 |
| **Units** | Solution Time: Seconds<br>Frequency: Hertz |
| **System** | Time tag: GPS Time |
| **Resolution** | Daily |
| **Inputs** | CLK1B |
| **Data Volume** | < 1 Mbyte/day/sat |
| **Data Format** | Level-1B File Format: **OSCFQ** |
| **Latency** | ≈ 12 days |
| **Notes** | Data from one Day is stored in one file |

### *IV.2.5 Dual-One-Way Ranging Data*

| **Product Identifier** | **KBR1B_(DATE)_X_RL** |
|---|---|
| **Product Definition** | • Time tag<br>• Biased Range, Range-Rate & Range-Accelerations between the C.G. of the two GRACE satellites.<br>• Ionospheric corrections<br>• Light-time corrections<br>• KBR antenna phase center range correction |
| **Representation** | Time tag: Seconds past 12:00:00 (noon) 01-Jan-2000 |
| **Units** | Time Tag: Seconds<br>Range & Derivatives : m, m/s, $m/s^2$<br>Corrections: m |
| **System** | Time Tag: GPS Time |
| **Resolution** | 5 seconds |
| **Inputs** | Level-1A IPU and other ancillary data |
| **Data Volume** | 2 Mbytes/day |
| **Data Format** | Level-1A File Format: **KBR1B** |
| **Latency** | ≈ 12 days |
| **Notes** | All data from one Day are stored together. |

### *IV.2.6 Star Camera Data*

| | |
|---|---|
| **Product Identifier** | **SCA1B_(DATE)_A_RL**<br>**SCA1B_(DATE)_B_RL** |
| **Product Definition** | • Time Tag & SCA head indicators<br>• Quaternions specifying the inertial orientation of the Science Reference Frame.<br>• Housekeeping data |
| **Representation** | Time-tag: Seconds past 12:00:00 (noon) 01-Jan-2000<br>Quaternions: I/J/K components & the cosμ/2 component |
| **Units** | Time Tag: Seconds<br>Quaternions: N/A |
| **System** | Time Tag: GPS Time<br>Quaternions: N/A |
| **Resolution** | Quaternions: 5 second |
| **Inputs** | SCA1A, CLK1B & QSA1B |
| **Data Volume** | < 1 Mbytes/day/sat |
| **Data Format** | Level-1A File Format: **SCA1B** |
| **Latency** | ≈ 12 days |
| **Notes** | All data from one Day are stored together. |

### *IV.2.7 IPU Housekeeping Data*

| | |
|---|---|
| **Product Identifier** | **IHK1B_(DATE)_A_RL**<br>**IHK1B_(DATE)_B_RL** |
| **Product Definition** | • Time tag<br>• IPU, SPU & SCA power supply voltages<br>• IPU, MWA & KBR temperatures<br>• KBR Switch settings |
| **Representation** | (TBD) |
| **Units** | Time: Sec past 12:00 (noon), Jan 01, 2000<br>Temp: °C<br>Voltages: Volts |
| **System** | (TBD) |
| **Resolution** | (TBD) |
| **Inputs** | (TBD) |
| **Data Volume** | (TBD) |
| **Data Format** | Level-1A File Format: **IHK1X** |
| **Latency** | 1 day |
| **Notes** | All data from one Day are stored together. |

## IV. 3 ICU DATA

This section contains a description of the Level-1A data originating in the ICU.

### *IV.3.1 Acceleration Data*

| | |
|---|---|
| **Product Identifier** | **ACC1B_(DATE)_A_RL**<br>**ACC1B_(DATE)_B_RL** |
| **Product Definition** | • Time-tag.<br>• Linear & Angular acceleration components of ACC proof mass relative to its electrode. |
| **Representation** | N/A |
| **Units** | Timetag: Seconds<br>Linear Accelerations: $m/s^2$<br>Angular Accelerations: $rad/s^2$ |
| **System** | Timetag: GPS Time<br>Linear & Angular Accelerations: Science Reference Frame |
| **Resolution** | 1 seconds |
| **Inputs** | Level-1A Accelerometer & ancillary data |
| **Data Volume** | 7 Mbytes/day/sat |
| **Data Format** | Level-1B File Format: **ACC1B** |
| **Latency** | ≈ 12 days |
| **Notes** | All data from one Day are stored together. |

### *IV.3.2 Accelerometer Housekeeping Data*

| | |
|---|---|
| **Product Identifier** | **AHK1B_(DATE)_A_RL**<br>**AHK1B_(DATE)_B_RL** |
| **Product Definition** | • Time-tag: Time of data acquisition from the accelerometer.<br>• Proof-mass bias voltage, Capacitive Sensor output & working order<br>• ICU & SU temperatures, reference voltages & primary and secondary power supply voltage. |
| **Representation** | N/A |
| **Units** | Timetag: Seconds<br>Temperatures: °C<br>Voltages : Volts |
| **System** | Timetag: GPS Time |
| **Resolution** | Bias Voltage & Capacitive Sensor output : 10 seconds<br>Others : 60 seconds |
| **Inputs** | Level-1A Accelerometer & Ancillary Data |
| **Data Volume** | < 1 Mbytes/day/sat |
| **Data Format** | Level-1B File Format: **ACC1A** |
| **Latency** | 1 day |
| **Notes** | All data from one Day are stored together. |

## IV. 4 SPACECRAFT HOUSEKEEPING DATA

This section defines the products extracted from the spacecraft housekeeping data stream, which are useful for generation of products at subsequent levels.

### *IV.4.1 Magnetometer & Magnetorquer Data*

| | |
|---|---|
| **Product Identifier** | **MAG1B_(DATE)_A_RL**<br>**MAG1B_(DATE)_B_RL** |
| **Product Definition** | • X/Y/Z measured components of Earth magnetic fields<br>• Magnetorquer currents |
| **Representation** | N/A |
| **Units** | Time tag: seconds<br>MAG: nano-Tesla<br>MTQ currents: Amps |
| **System** | Time Tag: GPS Time<br>MAG: In Satellite Frame |
| **Resolution** | 60 second |
| **Inputs** | MAG1A, CLK1B |
| **Data Volume** | < 1 Mbyte/day/sat |
| **Data Format** | Level-1B file format: **MAG1X** |
| **Latency** | ≈ 12 days |
| **Notes** | |

### *IV.4.2 Thruster Activation Data*

| | |
|---|---|
| **Product Identifier** | **THR1B_(DATE)_A_RL**<br>**THR1B_(DATE)_B_RL** |
| **Product Definition** | • Activation Time Tag<br>• Cumulative work cycles for all thrusters<br>• On-Time for present activation for all thrusters<br>• Cumulative on-time for all thrusters |
| **Representation** | 32-bit fixed point, so that the cumulative numbers wrap around at 4294967295 (= $2^{32}$-1) |
| **Units** | Time tag: seconds<br>On-Time: milli-seconds |
| **System** | Time: GPS Time |
| **Resolution** | At each thruster activation epoch |
| **Inputs** | THR1A, CLK1B |
| **Data Volume** | < 1 Mbyte/day/sat (average) |
| **Data Format** | Level-1B file format: **THR1X** |
| **Latency** | ≈ 12 days |
| **Notes** | See (I.5.3.2) for accomodation & firing direction of thrusters |

### *IV.4.3 Tank Sensor Information*

| | |
|---|---|
| **Product Identifier** | **TNK1B_(DATE)_A_RL**<br>**TNK1B_(DATE)_B_RL** |
| **Product Definition** | • Time Tag<br>• Pressures : Tank internal & at pressure regulator<br>• Temperatures: Skin & tank adaptor temperature |
| **Representation** | N/A |
| **Units** | Time tag: seconds |
| **System** | Time: GPS Time |
| **Resolution** | TBD |
| **Inputs** | TNK1A, CLK1B |
| **Data Volume** | < 1 Mbyte/day/sat (average) |
| **Data Format** | Level-1B file format: **TNK1X** |
| **Latency** | ≈ 12 days |
| **Notes** | See Satellite Specification Document for locations of the temperature & pressure sensors. |

### *IV.4.4 Satellite Mass Information*

| | |
|---|---|
| **Product Identifier** | **MAS1B_(DATE)_A_RL**<br>**MAS1B_(DATE)_B_RL** |
| **Product Definition** | • Time Tag<br>• Spacecraft mass & error estimate based on thruster usage<br>• Spacecraft mass & error estimate based on tank sensors |
| **Representation** | N/A |
| **Units** | Time tag: seconds<br>Mass : kg |
| **System** | Time: GPS Time |
| **Resolution** | TBD |
| **Inputs** | MAS1A, CLK1B |
| **Data Volume** | < 1 Mbyte/day/sat (average) |
| **Data Format** | Level-1B file format: **MAS1X** |
| **Latency** | ≈ 12 days |
| **Notes** | |

### *IV.4.5 OBDH to GPS Time Mapping*

| | |
|---|---|
| **Product Identifier** | **TIM1B_(DATE)_A_RL**<br>**TIM1B_(DATE)_B_RL** |
| **Product Definition** | Mapping between the time kept by the & GPS time determined by the IPU |
| **Representation** | Time-tag : Seconds past 12:00:00 (noon) 01-Jan-2000 |
| **Units** | Solution Time: Seconds<br>Time offset & offset rates: seconds & sec/sec |
| **System** | Time tag: Receiver Clock Time |
| **Resolution** | 60 seconds |
| **Inputs** | GNV1A |
| **Data Volume** | < 1 Mbyte/day/sat |
| **Data Format** | Level-1A File Format: **TIM1X** |
| **Latency** | 24 hours |
| **Notes** | Data from one Day is stored in one file |

## IV. 5 ANCILLARY GRACE DATA

This section contains a description of ancillary data related to the GRACE satellites. These data may be gathered during flight or in pre-flight testing, or from independent analyses carried out specifically for GRACE, and are anticipated to be useful in the analysis of the GRACE flight data at all levels.

### *IV.5.1 Star Camera Heads Orientation wrt SRF*

| | |
|---|---|
| **Product Identifier** | **QSA1B_(DATE)_A_RL**<br>**QSA1B_(DATE)_B_RL** |
| **Product Definition** | Quaternion of the orientation of each Star Camera head relative to the Science Reference Frame.. |
| **Representation** | Quaternions: Vector-I/J/K components & the Scale component |
| **Units** | N/A |
| **System** | N/A |
| **Resolution** | Updated as necessary |
| **Inputs** | Results from pre-flight ground tests and analyses |
| **Data Volume** | N/A |
| **Data Format** | Level-1B format : **SCA1B** |
| **Latency** | N/A |
| **Notes** | One file will contain this information for mission duration |

### *IV.5.2 Satellite Frame Orientation wrt SRF*

| | |
|---|---|
| **Product Identifier** | **QSB1B_(DATE)_A_RL**<br>**QSB1B_(DATE)_B_RL** |
| **Product Definition** | Quaternion of the orientation of the Satellite Frame relative to the Science Reference Frame. |
| **Representation** | Quaternions: Vector-I/J/K components & the Scale component |
| **Units** | N/A |
| **System** | N/A |
| **Resolution** | Updated as necessary |
| **Inputs** | Results from pre-flight ground tests and analyses |
| **Data Volume** | N/A |
| **Data Format** | Level-1B format : **SCA1B** |
| **Latency** | N/A |
| **Notes** | One file will contain this information for mission duration |

### *IV.5.3 Star Camera Heads Orientation wrt K-Frame*

| | |
|---|---|
| **Product Identifier** | **QKS1B_(DATE)_A_RL**<br>**QKS1B_(DATE)_B_RL** |
| **Product Definition** | Quaternion of the orientations of the Star Camera heads relative to the K-Frame. |
| **Representation** | N/A |
| **Units** | N/A |
| **System** | N/A |
| **Resolution** | Valid until next in-flight calibation. |
| **Inputs** | Results from in-flight calibration measurements. |
| **Data Volume** | N/A |
| **Data Format** | Level-1 Data Format: **SCA1B** |
| **Latency** | N/A |
| **Notes** | |

### *IV.5.4 Center of Mass Offset Estimate*

| | |
|---|---|
| **Product Identifier** | **VCM1B_(DATE)_A_RL**<br>**VCM1B_(DATE)_B_RL** |
| **Product Definition** | Estimate of the vector offset of the satellite center of mass relative to the proof-mass center location. |
| **Representation** | N/A |
| **Units** | m |
| **System** | Science Reference Frame |
| **Resolution** | Valid until the next in-flight CG Calibration Maneuver |
| **Inputs** | Results from in-flight calibrations and analyses |
| **Data Volume** | N/A |
| **Data Format** | Level-1B format : **XXXVO** |
| **Latency** | N/A |
| **Notes** | |

### *IV.5.5 GPS Navigation Antenna Offset*

| | |
|---|---|
| **Product Identifier** | **VGN1B_(DATE)_A_RL**<br>**VGN1B_(DATE)_B_RL** |
| **Product Definition** | Components of the vector between the satellite center of mass and the GPS (zenith) navigation antenna phase center. |
| **Representation** | N/A |
| **Units** | meters |
| **System** | Science Reference Frame |
| **Resolution** | Valid for mission lifetime |
| **Inputs** | Results from pre-flight measurements. |
| **Data Volume** | N/A |
| **Data Format** | Level-1B Format: **XXXVO** |
| **Latency** | N/A |
| **Notes** | |

### *IV.5.6 K-Band Antenna Offset Estimate*

| | |
|---|---|
| **Product Identifier** | **VKB1B_(DATE)_A_RL**<br>**VKB1B_(DATE)_B_RL** |
| **Product Definition** | Components of the vector between the satellite center of mass and the phase center of K-Band antenna. |
| **Representation** | N/A |
| **Units** | meters |
| **System** | Science Reference Frame |
| **Resolution** | Valid until the next KBR Calibration maneuver |
| **Inputs** | Results from in-flight calibrations & analyses. |
| **Data Volume** | N/A |
| **Data Format** | Level-1B Format: **XXXVO** |
| **Latency** | N/A |
| **Notes** | |

### *IV.5.7 GPS Occultation Antenna Offset*

| | |
|---|---|
| **Product Identifier** | **VGO1B_(DATE)_A_RL**<br>**VGO1B_(DATE)_B_RL** |
| **Product Definition** | Components of the vector from the satellite center of mass to the GPS (aft) occultation antenna phase center. |
| **Representation** | N/A |
| **Units** | meters |
| **System** | Science Reference Frame |
| **Resolution** | Valid for mission duration. |
| **Inputs** | Results from pre-flight measurements. |
| **Data Volume** | N/A |
| **Data Format** | Level-1B Format: **XXXVO** |
| **Latency** | N/A |
| **Notes** | |

### *IV.5.8 GPS Back-Up Antenna Offset*

| | |
|---|---|
| **Product Identifier** | **VGB1B_(DATE)_A_RL**<br>**VGB1B_(DATE)_B_RL** |
| **Product Definition** | Components of the vector from the satellite center of mass to the GPS (aft) back-up antenna phase center. |
| **Representation** | N/A |
| **Units** | meters |
| **System** | Science Reference Frame |
| **Resolution** | Valid for mission duration. |
| **Inputs** | Results from pre-flight measurements. |
| **Data Volume** | N/A |
| **Data Format** | Level-1B Format: **XXXVO** |
| **Latency** | N/A |
| **Notes** | |

### *IV.5.9 SLR Corner Cube Offset*

| | |
|---|---|
| **Product Identifier** | **VSL1B_(DATE)_A_RL**<br>**VSL1B_(DATE)_B_RL** |
| **Product Definition** | Components of the vector from the satellite center of mass to the center of the SLR corner cube array. |
| **Representation** | N/A |
| **Units** | meters |
| **System** | Science Reference Frame |
| **Resolution** | Valid for mission duration. |
| **Inputs** | Results from pre-flight measurements. |
| **Data Volume** | N/A |
| **Data Format** | Level-1B Format: **XXXVO** |
| **Latency** | N/A |
| **Notes** | |

### *IV.5.10 Input Time-Variable Atmospheric Gravity Model*

| | |
|---|---|
| **Product Identifier** | **AOD1B_(DATE)_X_RL** |
| **Product Definition** | Time series of fully-normalized spherical harmonic coefficients of the geopotential contributions from combined ECMWF Atmospheric and JPL Barotropic ocean model – including the individual atmospheric and oceanic components as well as the sum total. |
| **Representation** | N/A |
| **Units** | Time tag : Days<br>Coefficients : Dimensionless |
| **System** | N/A |
| **Resolution** | Time: 6 hours<br>Space: Max degree/order 100 |
| **Inputs** | Level-1B ancillary data |
| **Data Volume** | 0.9 Mb/day |
| **Data Format** | Level-1 Format: **AOD1B** |
| **Latency** | ≈ 12 days |
| **Notes** | For the processing algorithm & input data description, please see *AOD1B Product Description Document*. |

### *IV.5.11 Ocean Bottom Pressure Load Model*

| | |
|---|---|
| **Product Identifier** | **OCN1B_(DATE)_X_RL** |
| **Product Definition** | Time series of grids of ocean bottom pressures from JPL Barotropic ocean model. |
| **Representation** | N/A |
| **Units** | Time tag : Days<br>Bottom Pressure : mBar |
| **System** | Earth Fixed Frame |
| **Resolution** | Time: 6 hours<br>Space: 1.125° Lat/Lon equi-angular grid |
| **Inputs** | Level-1B ancillary data |
| **Data Volume** | 2.5 Mb/day |
| **Data Format** | Level-1 Format: **OCN1B** |
| **Latency** | ≈ 12 days |
| **Notes** | For the processing algorithm & input data description, please see *AOD1B Product Document*. |

# V LEVEL-2 DATA PRODUCTS

## V. 1 INTRODUCTION

The Level-2 products are derived by processing the Level-1B and other ancillary data. Instrument measurements over several days are consolidated into a sequence of gravity field estimates, representing the time-variable and average Earth gravity field models.

The details behind the Level-2 product nomenclature are given in the *Level-2 Product User Handbook* – where a more detailed description of the content is provided. Since the Level-2 product nomenclature deviates from the conventions for Level-1 products, they are described differently from the Level-1 products. The following section is extracted from the *Level-2 Product User Handbook*.

## V. 2 PRODUCT INDENTIFIER

A GRACE Level-2 gravity field product is a set of spherical harmonic coefficients of the exterior geopotential. A product name is specified as

*PID-2_YYYYDOY-YYYYDOY_dddd_sssss_mmmm_rrrr*

Where

*PID* is 3-character product identification mnemonic
*-2* denotes a GRACE Level-2 product
*YYYYDOY-YYYYDOY* specifies the date range (in year and day-of-year format) of the data used in creating this product
*dddd* is the (leading-zero-padded) number of calendar days from which data was used in creating the product.
*sssss* is an institution specific string
*mmmm* is a 4-character free string (e.g. used for distinguishing constrained from unconstrained solutions)
*rrrr* is a 4-digit (leading-zero-padded) release number (0000, 0001, … )

The Product Identifier mnemonic (PID) is made up of one of the following values for each of its 3 characters:

*1st Character*

= G: Geopotential coefficients

*2nd Character*

= S: Estimate made from only GRACE data

= C: Combination estimate from GRACE and terrestrial gravity information
= E: Any background model specified as a time-series
= A: Average of any background model over a time period

*3rd Character*

= M: Estimate of the Static field.
(The data files for this product also contain records with the epochs & rates used to model secular changes in the background gravity model)
= U: Geopotential estimate relative to the background gravity model
= T: Total background gravity model except for background static model
= A: non-tidal atmosphere (see *AOD1B Description Doc*)
= B: non-tidal Oceans (see *AOD1B Description Doc*)
= C: combination of non-tidal atmosphere and ocean -
for details of combination see *AOD1B Description Doc*

Not all possible combinations of characters make sense, or are provided as products. As of this release, the list of defined products, and the associated format names, is summarized in Table 1.

| PID | Format | Remarks |
|---|---|---|
| GSM | GRCOF2 | |
| GCM | GRCOF2 | |
| | | |
| GAA | GRCOF2 | |
| GAB | GRCOF2 | |
| GAC | GRCOF2 | |
| | | |
| | | |
| | | |

**Table 1 Product Identifiers and associated formats**

*Special Note-1: Change of Product Name*

As of this release of the *GRACE L-2 Product User Manual,* the Level-2 product naming convention has changed. The string *_dddd_* has been moved behind the *_YYYYDOY-YYYYDOY_* string in the product name.

*Special Note-2: Usage History of Level-2 Product Name*

UTCSR has produced RL01 Level-2 products in the old naming convention, and adopted the new naming convention starting from RL02 products.

GFZ has produced RL01 and RL02 Level-2 products in the old naming convention, and changed to the new names with RL03 products.

JPL has produced RL01 products in the old naming convention, and adopted the new convention with its RL02 products.

## V. 3 PRODUCT ATTRIBUTES

The geopotential is represented by the fully-normalized coefficients of a spherical harmonic expansion, to a specified maximum degree and order.

The time-variability of the geopotential is nominally represented by a sequence of approximately 30-day estimates of the spherical harmonic coefficients.

The maximum degree and order of the monthly estimates will be at most 100, and that for an estimate of the long-term mean will be at least 160.

The monthly estimates will be produced with a 60-day latency from, and estimates of long-term mean will be produced occasionally, as the results warrant.

Each data product will consist of one gravity field solution – which will have been made using GRACE data within a specified span.

# VI APPENDIX

## VI. 1 BACKGROUND

In the GRACE mission, the Instruments Processing Unit (IPU) delivers all data from the K-Band Ranging Assembly, the GPS receiver, and the Star Camera Assemblies at its science output port. The Accelerometer data are delivered by its Interface Control Unit (ICU). Additional data from the bus sub-systems or softwares are collected by the On-Board Data Handler (OBDH) and delivered as House-keeping Data. All the Communication Packets (CPs) are collected at the OBDH and repackaged and delivered for downlink. Most CP measurement contents are binary encoded (non-engineering units), and are described as assembled by the respective science instrument assemblies on board the GRACE satellites.

For completeness, the contents of the relevant CPs are described in this section, with appropriate references to the originating documents for the complete definition of their contents.

*It must be emphasized that this Appendix is included in this document only for ease of future reference, and to complete the link between this document and the individual unit specifications. None of these products are either stored as such, nor are they intended for distribution.*

In the event of a conflict, the descriptions in the referenced unit or satellite level documents supersede this document.

## VI. 2 ACCELEROMETER DATA

The accelerometers provide measurements of the non-gravitational forces acting on each satellite by measuring the electrostatic forces required to keep a proof-mass centered within its electrode cage. These measurements serve to separate the non-gravitational from the gravitational effects in the intersatellite range changes.

| **Packet Identifier** | **ICU_M or ICU_R** |
|---|---|
| **Product Definition** | • *0.1 second data:* Time of data acquisition & Linear acceleration components of ACC proof-mass relative to its electrode cage.<br>• *1 second data:* Angular acceleration components of ACC proof mass relative to its electrode cage.<br>• *10 second data:* Proof-mass bias voltage, capacitive sensors output & sensor working order<br>• *60 second data:* SU & ICU temperatures, reference voltages & primary and secondary power supply voltages. |
| **Representation** | Time Tag: Relative to the last 1 Hz synchronization pulse received from the IPU (< 10 Seconds)<br>Linear Accelerations: Built up in 100 milliseconds preceding TTAG<br>Angular Accelerations: Builit up in 1 second preceding the TTAG. |
| **Units** | Non-Dimensional (Binary-encoded, non-engineering units) |
| **System** | Time Tag: Receiver Clock Time ( within 100 micro-seconds)<br>Linear & Angular Accelerations: Accelerometer Frame |
| **Resolution** | Time-Tag: 0.1 seconds<br>Linear Accelerations: 0.1 seconds<br>Angular Accelerations: 1.0 seconds<br>Proof-mass Bias Voltage : 10 seconds<br>Others : Last collected sample |
| **Inputs** | N/A |
| **Data Volume** | 11.7 Mbytes/day (average) |
| **Data Format** | One-Second data block per packet, with contents augmented at intervals as specified above.<br>*24 bit fixed-point binary:* TTAG, Linear & Angular Accelerations & Proof-mass bias voltage<br>*12 bit fixed-point binary:* All others |
| **Latency** | As per data dump schedule |
| **Notes** | Ref: Section 3.4 & 5.4 in ACC Spec (327-520)<br>Each one second packet may contain 10 or 11 samples of linear accelerations. |

## VI. 3 IPU DATA

The IPU is the nerve center for the spacecraft. It provides digital signal processing functions for the GPS data, for the K-Band ranging data and for the Star Camera assemblies. In addition, the IPU also provides the orbit and time references for the other spacecraft systems and functions. The following sections describe all the CPs expected to be available from the IPU during nominal science operations.

### *VI.3.1 KBR, GPS-OD & GPS-OCC Phase Data*

| **Product Identifier** | **QuadraticFitObservables** |
|---|---|
| **Product Definition** | • Time of quadratic fit point<br>• PRN or KBR indicator, ASIC antenna number, data flags & sample interval of quadratic fit data.<br>• One or more of CA, P1 & P2 data receiver channel, & its SNR, carrier phase & pseudo-range measurement.<br>• *Alternatively*, the KBR data receiver channel & its SNR, carrier phase measurement.<br>• Carrier phase doppler and doppler rate<br>• One or more of CA, P1 & P2 channel carrier amplitude and/or carrier phase residuals inside the quadratic fit interval, at specified variable rates (for either OD data or OCC data)<br>• *Alternatively*, the KBR amplitude and/or phase residuals inside the quadratic fit interval. |
| **Representation** | CA Data:<br>Carrier Phase: in L1 cycles<br>pseudo-range: in CA chips<br>P1 Data:<br>Carrier Phase: Difference between P1 & CA channel measurement, in L1 cycles<br>pseudo-range: Difference between P1 & CA ranges in CA chips<br>P2 Data:<br>Carrier Phase: Difference between P2 (scaled to L1) & CA channel measurements, in L1 cycles<br>pseudo-range: Difference between P2 & CA ranges in CA chips<br>Quadratic Fit: Recoverable from phase, doppler & doppler rate<br>Phase Residuals from Quadratic Fit:<br>Difference between actual phase value & quadratic fit for the particular phase type available. |
| **Units** | Time: Seconds |

| | |
|---|---|
| | Phase: Cycles |
| **System** | Quadratic Fit Point: Receiver Clock Time |
| **Resolution** | KBR phase data: 0.1 sec<br>GPS-OD phase data: 1 sec (tau: 30 second)<br>GPS-OCC phase data: 0.02 sec |
| **Inputs** | N/A |
| **Data Volume** | KBR data: 4.5 Mbytes/day/satellite (average)<br>GPS-OD data: 15.3 Mbytes/day/satellite (average)<br>GPS-OCC data: 25 Mbytes/day/satellite (average) |
| **Data Format** | KBR phase data: "10-Second Quad-Fit Packet" format<br>GPS-OD phase data: "30-Second Quad-Fit Packet" format<br>OCC phase data: "1-Second Quad-Fit Packet" format |
| **Latency** | As per data dump schedule |
| **Notes** | Ref: **QuadraticFitObservables** packet in IPU Spec (327-540) |

### *VI.3.2 Star Camera Assembly Data*

| **Product Identifier** | **SCAAttitude** |
|---|---|
| **Product Definition** | Data packets containing:<br>• Time of solution<br>• Star camera head ID, data flags & confidence of solution<br>• Star camera quaternion solution |
| **Representation** | Quaternions: 4-Elements from each SCA (I/J/K elements of quaternion rotation axis * sin( μ/2 ); and cos( μ/2 ) element of quaternion * 2147483648.0) |
| **Units** | Solution Time: Seconds |
| **System** | Solution Time: Receiver Clock Time |
| **Resolution** | Prime Star Camera Quaternions: 1.0 seconds<br>Secondary Star Camera Quaternions: 1 second (variable) |
| **Inputs** | N/A |
| **Data Volume** | 3.5 Mbytes/day/satellite |
| **Data Format** | *Fixed Point Long (4 bytes):* Solution time & quaternions |
| **Latency** | As per data dump schedule |
| **Notes** | The prime and secondary SCA are selected from ground command.<br>Ref: **SCAAttitude** packet from IPU Spec (327-540) |

### *VI.3.3 IPU Navigation Solution*

| **Product Identifier** | **AntennaState** |
|---|---|
| **Product Definition** | Data packets containing the IPU navigation solution, including<br>• Solution Time<br>• Chi-Squared & Covariance Precision Multiplier<br>• Raw clock steering voltage<br>• Receiver position & offset between GPS & Receiver time<br>• Formal error in receiver position & time offset<br>• Receiver velocity & time offset rate<br>• Formal error in receiver velocity & time offset rate<br>• PRN's used in solution, including their azimuth & elevation values |
| **Representation** | N/A |
| **Units** | Solution Time: Seconds<br>Position & Velocity: m and m/second<br>Time offset & offset rates: seconds & sec/sec<br>Others: Dimensionless |
| **System** | Solution Time: Receiver Clock Time<br>Position & Velocity: WGS-84 |
| **Resolution** | 60 seconds (all data) |
| **Inputs** | N/A |
| **Data Volume** | 32 Kbytes/day/satellite |
| **Data Format** | *IEEE Double (8 bytes)*: Position, Velocity, Time Offset & Time Offset Rate<br>*IEEE Float (4 bytes):* All others |
| **Latency** | As per data dump schedule |
| **Notes** | Ref: **AntennaState** packet from IPU Spec (327-540) |

### *VI.3.4 IPU Housekeeping Data*

| | |
|---|---|
| **Product Identifier** | **ADC** |
| **Product Definition** | Data packets containing the onboard sensor values that may be temperature or voltage or calculated currents |
| **Representation** | (TBC) |
| **Units** | Volts, °C |
| **System** | N/A |
| **Resolution** | ≈ 400 sec |
| **Inputs** | N/A |
| **Data Volume** | < 10 Kbytes/day |
| **Data Format** | (TBC) |
| **Latency** | As per data dump schedule |
| **Notes** | Ref: **ADC** packet in IPU Spec (327-540) |

## VI. 4 HOUSE-KEEPING APPLICATION PACKETS

This section describes the contents of some of the relevant Application Packets available in the spacecraft housekeeping data stream. These data may be generated by either the spacecraft payloads or subsystems (with the exception of the IPU and the ICU), or by the on-board software.

### *VI.4.1 Time Stamp Packet*

| **Product Identifier** | **TimeStamp** |
|---|---|
| **Product Definition** | Data packets containing the spacecraft elapsed time (SCET) or GPS time estimate, corresponding to the 1 Hz synchronization pulse on the satellite.<br>• Time Flag: whether SCET or GPS Time is provided<br>• Time Estimate |
| **Representation** | N/A |
| **Units** | Time Estimate: Seconds |
| **System** | Time Estimate: SCET since boot-up or GPS Time, in seconds since Jan 6, 1980. |
| **Resolution** | 1 second |
| **Inputs** | N/A |
| **Data Volume** | 0.7 Mbytes/day |
| **Data Format** | Time: 4 bytes |
| **Latency** | As per data dump schedule |
| **Notes** | This packet is interleaved into the telemetry data stream at the start of every one second, such that all data packets between two time stamp packets may be assigned logically the time of the first time stamp.<br>Ref: **TimeStamp** packet, Sections 2.8.4, 6, 3.6.3.2, 3.6.8.2 in Onboard Software Data Interfaces & Data Flow (GR-DJO-SW-0002 – Iss 1.0). |

### *VI.4.2 AOCS Default H/K Data*

| | |
|---|---|
| **Product Identifier** | **AOC_DEFHK** |
| **Product Definition** | • Thruster on-time commanded by the AOCS during current OBDH work cycle<br>• Satellite angular rates estimated from IMU (Gyro) |
| **Representation** | • Thruster on-time: Signed integer along 3 axes: The sign determines uniquely the thrusters to be activated; the magnitude is the on-time.<br>• Satellite Rates: Fixed (in steps of 10 microRad/sec)<br>Time-tag determined by previous TimeStamp packet.<br>This information is part of a larger AOCS H/K packet. |
| **Units** | On-Time: milli-seconds |
| **System** | Time: Receiver Time<br>Rates: Satellite Frame relative to inertial |
| **Resolution** | 3 second (average, if every 3rd packet is available) |
| **Inputs** | N/A |
| **Data Volume** | 2.5 Mbytes/day/satellite |
| **Data Format** | Packaged as part of AOCS H/K |
| **Latency** | As per data dump schedule |
| **Notes** | Ref: **AOC_DEFHK** packet, Section 7.1.4.1 in Onboard Software User Manual (GR-DJO-SW-0005 – Issue 1.2). |

### *VI.4.3 Cumulative Thruster On-Time Data*

| | |
|---|---|
| **Product Identifier** | **AOC_STAT** |
| **Product Definition** | • Cumulative number of activations for each thruster<br>• Cumulative on-time for each thruster<br>• TimeStamp of most recent thruster activation |
| **Representation** | Time tag determined by previous TimeStamp packet. |
| **Units** | Times: milli-seconds |
| **System** | Time: Receiver Time |
| **Resolution** | 9 second (if every 9$^{th}$ packet is available) |
| **Inputs** | N/A |
| **Data Volume** | 1 Mbyte/day/satellite |
| **Data Format** | This information is part of a larger AOCS H/K packet. |
| **Latency** | As per data dump schedule |
| **Notes** | Ref: **AOC_STAT** packet, Section 7.1.4.1 in Onboard Software User Manual (GR-DJO-SW-0005 – Issue 1.2). |

### *VI.4.4 Satellite Thermistors Data*

| | |
|---|---|
| **Product Identifier** | **ANARAW_SCT & ANARAW_HRT** |
| **Product Definition** | • Standard calibration thermistor measurements<br>• High resolution thermistor measurements |
| **Representation** | Time tag determined by previous TimeStamp packet |
| **Units** | Temperature: °C |
| **System** | Time: Receiver Time |
| **Resolution** | 90 second (if every 9$^{th}$ packet is available) |
| **Inputs** | N/A |
| **Data Volume** | 0.3 Mbytes/day/satellite |
| **Data Format** | Temperatures: |
| **Latency** | As per data dump schedule |
| **Notes** | Ref: **ANARAW_SCT** & **ANARAW_HRT** packets, Sections 4.2.2, 4.2.3.1, & 4.2.3.2 in Onboard Software Data Interfaces & Data Flow (GR-DJO-SW-0002 – Iss 1.0). |

### *VI.4.5 Magneto-Torquer & Magnetometer Data*

| | |
|---|---|
| **Product Identifier** | **MAG** |
| **Product Definition** | • X/Y/Z measured components of Earth magnetic fields<br>• Magnetorquer currents |
| **Representation** | Time tag determined by previous TimeStamp packet |
| **Units** | MAG: nano-Tesla<br>MTQ currents: Amps |
| **System** | Time: Receiver Time<br>MAG: In Satellite Frame |
| **Resolution** | 60 second (if every 6$^{th}$ packet is available) |
| **Inputs** | N/A |
| **Data Volume** | 0.1 Mbytes/day |
| **Data Format** | N/A |
| **Latency** | As per data dump schedule |
| **Notes** | Ref: **MAG** packet, Sections 4.2.2, & 4.5.3 in Onboard Software Data Interfaces & Data Flow (GR-DJO-SW-0002 – Iss 1.0). |

# LIST OF ACRONYMS

| | |
|---|---|
| **A** | |
| ACC | Accelerometer |
| ADC | Analog-Digital Converter |
| AOCS | Attitude & Orbit Control System |
| **B** | |
| **C** | |
| **D** | |
| DFD-NZ | German Remote Sensing Data Center, Neustrelitz |
| DLR | Deutsches Zentrum für Luft und Raumfahrt |
| **E** | |
| **F** | |
| **G** | |
| GFZ | GeoForschungsZentrum Potsdam |
| GPS | Global Positioning System |
| GRACE | Gravity Recovery And Climate Experiment |
| **H** | |
| **I** | |
| ICRF | International Celestial Reference Frame |
| ICU | Interface & Control Unit |
| IERS | International Earth Rotation Service |
| IGS | International GPS Service |
| IMU | Inertial Measurement Unit |
| IPU | Instruments Processing Unit |
| ITRF | International Terrestrial Reference Frame |
| **J** | |
| JPL | Jet Propulsion Laboratory |
| **K** | |
| KBR | K-Band Ranging System |
| **L** | |
| **M** | |
| **N** | |
| **O** | |
| OBDH | On-Board Data Handler |
| **P** | |
| PODAAC | Physical Oceanography Distributed Data Archive |
| PCDU | Power Conditioning and Distribution Unit |
| **Q** | |
| **R** | |
| RDC | Raw Data Center |
| **S** | |
| SCA | Star Camera Assembly |
| SDS | Science Data System |
| SLR | Satellite Laser Ranging |
| SU | Sensor Unit (ACC) |
| **T** | |
| TBC | To Be Confirmed |
| TBC | To Be Completed |
| TBD | To Be Done |
| **U** | |
| USO | Ultra-Stable Oscillator |
| UTC | Coordinated Universal Time |
| UTCSR | University of Texas Center for Space Research |